DAVID T. MIGA, CET

BUILD THE MICROANALYZER

Repair microwave ovens the easy way with the Microanalyzer.

DID YOU KNOW THAT MICROWAVE ovens were invented more than a quarter century ago using technology more than half a century old? Even so, many electronic technicians are reluctant to service them because they do not understand them. That's a shame, considering the fact that there are millions of them in use. True, there is enough power in even the smallest microwave oven's power supply to kill a person, yet most technicians repair television receivers with many times more voltage without giving it another thought. The point is that a technician with the proper knowledge, who follows safe, intelligent procedures will never have a bad experience, and can make lots of money. This article explains how microwave ovens work, and shows you how to check all of the critical parts using the Microanalyzer project that we'll show you how to build.

How they work

A microwave oven is similar to an RF linear amplifier that has been purposely tuned to be unstable, and therefore to oscillate. The oscillator/amplifier tube is called a magnetron, and its schematic is similar to an ordinary tube rectifier (see Fig. 1). However, instead of the electrons having free space to boil off of the filament/cathode to be grabbed by the plate, the electrons are purposely frustrated by placing a powerful circular magnet around the cathode, causing the electrons to rotate around the cathode on their way to the plate. There are cavities in this section of a critical diameter that will cause the oscillations to be of a certain frequency, usually 2450 MHz. Because the plate of the tube does not operate at a high voltage, but instead is at ground potential, the cathode, therefore, is powered by a very high negative voltage, usually between three and four thousand volts. The filament of the tube is directly heated, so it must be capable of handling the high negative voltage as well as passing a 3-volt AC filament current of about 10 amps. In most microwave ovens, a single power transformer has both high-voltage and low-voltage secondaries.

The magnetron tube has a wire in the plate cavity that intercepts the swirling electrons and passes the energy to the top of the tube where the energy is transmitted by a small antenna tuned to the proper wavelength. The energy therefore transmits horizontally, similar to the ripples in a pond caused by a dropped pebble. The microwaves are routed by a square metal tube, or duct, called a waveguide, whose cross dimensions are tuned to the same wavelength as the magnetron. The waveguide directs the microwaves to the inside of the oven through a plastic or mica panel called a waveguide cover. The cover keeps food particles, grease, and steam from entering the waveguide, yet passes the magnetic energy.

Most microwave ovens have a stirrer, which can be motor activated, or in many ovens may be blown propeller style by the air

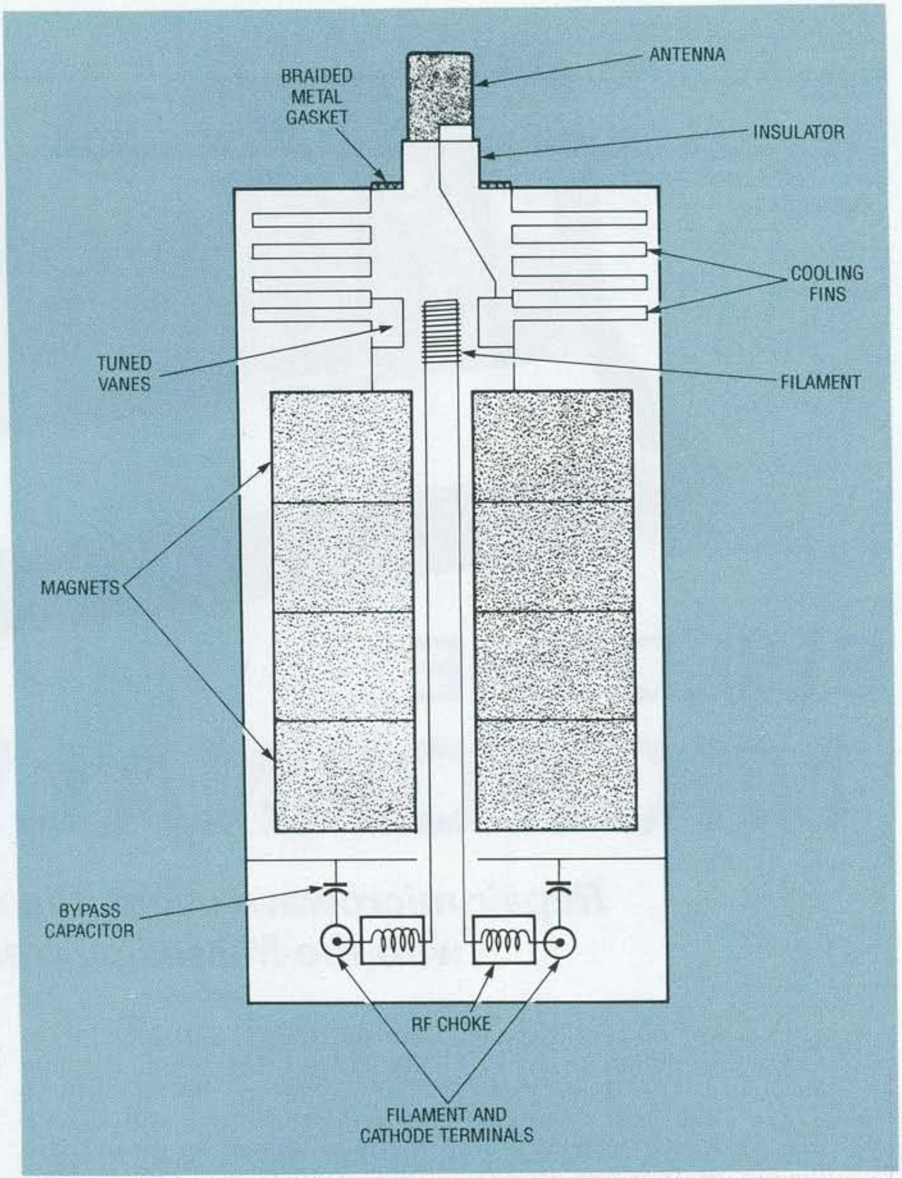

FIG. 1—A MICROWAVE OVEN'S oscillator/amplifier tube is called a magnetron. The electrons are purposely frustrated by placing a powerful circular magnet around the cathode, causing the electrons to rotate around the cathode on their way to the plate. There are cavities in this section of a critical diameter that will cause the oscillations to be of a certain frequency, usually 2450 MHz.

forced through the cooling fins of the magnetron. The stirrer is in the top of the oven, and it reflects the microwaves all around the oven cavity.

All microwave ovens have safety features to prevent unsafe microwave emissions. A series of micro-switches operate in a certain sequence, and are in series with one or more thermal switches, so as to assure that the power supply will operate only when all of the switches are in their correct positions. There's even a switch designed to short out the AC line, blowing the fuse, if any of the switches malfunction (see Fig. 2).

In operation, a mechanical timer or an electronic control unit will cause a relay or triac to pass 120-volts AC to the primary of the power transformer. The transformer has a 3-volt secondary for heating the magnetron's filament, and a 1500- to 2500-volt secondary for the high-voltage power supply. To keep the windings count low, a voltage-doubler circuit is used (see Fig. 3). During one half of the 60-cycle current, the transformer charges a high-voltage capacitor to ground through a high-voltage diode, cathode to ground. When the polarity reverses, the capacitor is free to discharge through the high-voltage winding. Since the voltages are in series, the voltage is doubled, although the current is reduced to what the capacitor can supply during its discharge. Therefore, the size of the capacitor controls the wattage, and the magnetron actually transmits energy in 60-Hz pulses. Note that the capacitor may remain charged for hours after using the oven, so it must be properly discharged before any components in the oven are checked.

When a microwave oven is operated, the magnetron usually takes about 3 seconds to fire up, because the filament must come up to temperature. If one listens, the firing up is audible; the magnetron emits a 1-second buzz immediately after the filament heats up. In most ovens with several power settings, the actual power delivered to the magnetron does not vary, but instead is cycled on and off by the controlling circuitry. The fan and light stay on, but the primary of the power transformer is energized or de-energized by a relay or triac, as shown in Fig. 4.

More sophisticated ovens may use a temperature probe, or even a heated tin-oxide gas-vapor sensor to determine when the food is cooked. The thermistor's resistance in the probe, or the voltage output of the gas sensor, is routed to a microprocessor, which has been programmed with the proper values to turn off power when the food is fully cooked, or "smells" done.

The Microanalyzer

The Microanalyzer is actually several pieces of test equipment rolled into one easy-to-carry cabinet. First, a 3½ digit DVM is incorporated to measure up to 500-volts AC or DC, with a high-voltage input that allows up to 5000-volts AC or DC. Second, a high-voltage supply is wired to a circuit that allows the testing in-circuit of the high-voltage diode and capacitor, with test voltages as high as 700 volts peak-to-peak. The results are plainly displayed by four neon indicators. Third, a semiconductor checker allows the testing of devices such as triacs, silicon controlled rectifiers, bipolar transistors, diodes, and MOSFET's.

Figure 5 is the schematic of the Microanalyzer. Power transformer T1 has a low-voltage sec-

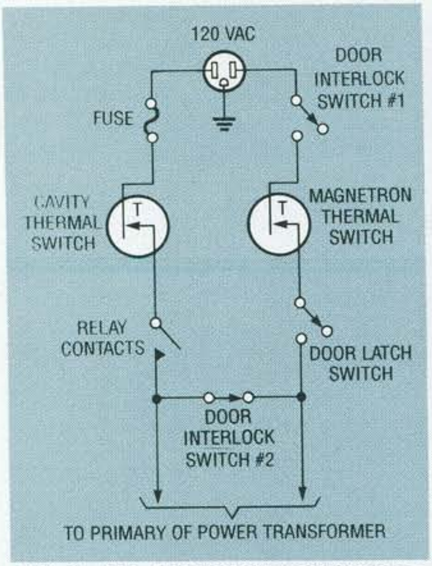

FIG. 2—ALL MICROWAVE OVENS have safety features to prevent harmful emissions. A series of micro-switches and thermal switches assure that the power supply will operate only when all of the switches are in their correct positions.

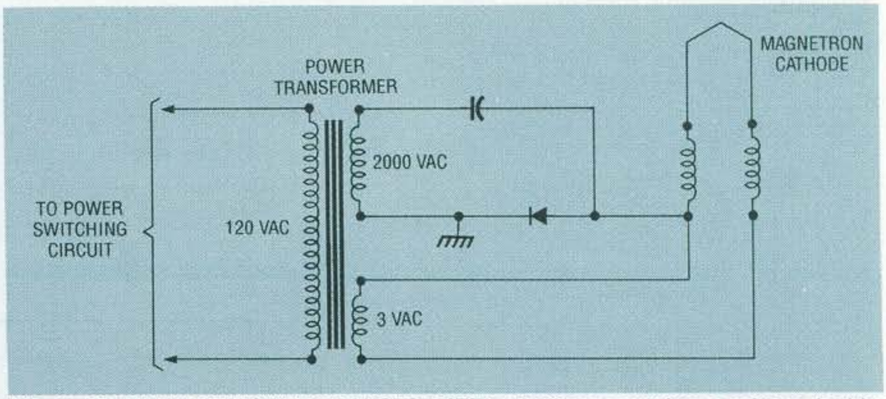

FIG. 3—TO KEEP THE POWER TRANSFORMER's windings count low, a voltage-doubler circuit is used to generate high voltages.

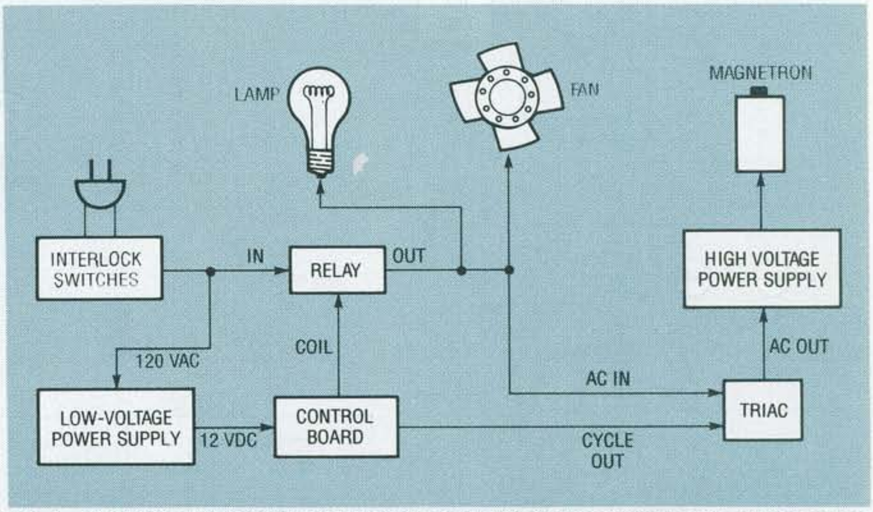

FIG. 4—IN OVENS WITH SEVERAL POWER SETTINGS, the magnetron is cycled on and off by the controlling circuitry. The fan and light stay on, but the primary of the power transformer is energized or de-energized by a relay or triac.

ondary that provides power to the DVM chip, IC2, via diode bridge BR1 and regulator IC1, as well as AC power to the semiconductor tester. The high-voltage secondary provides 250-volts AC for the high-voltage diode and capacitor tester. A small sample voltage is taken from the secondary's center tap via R30, D12, and D9 for the negative voltage required by IC2.

Selection between the DVM, the capacitor tester, and the diode tester is done by three-pole, three-position switch S2. In the "capacitor-test" and "diode-test" positions, one pole of S2 connects the internal high-voltage source to banana jack J2; a second pole turns off the DVM display via D8, R25, and Q3; the third pole selects either high-voltage AC for testing diodes, or DC for testing capacitors. If the selector is placed in the "diode-test" position, a 250-volt RMS potential is placed through current-limiter R1 to the diode under test between J1 and J2.

Across R1 is neon-indicator NE3, which will light only if the AC current flow is in the wrong direction; if the diode is shorted, for example. Diode D5 will keep NE3 off if the diode under test is good. The diode-OK neon indicator (NE1) will illuminate only with DC, since AC will be bypassed across NE1 by C1 and C2. The diode-open neon indicator (NE2) cannot light if the diode under test is good, since the diode will keep the positive voltage across R5, D6, and NE2 under 8 volts, which is the forward-bias potential of a good high-voltage diode. Diode D6 will keep NE2 off during negative flow; however, if the diode under test is open, there is sufficient positive voltage to light NE2.

Flipping S2 to the "cap-test" position switches D1 in line which causes a pulsating negative DC voltage to appear across R1. With an open circuit, NE1 and NE3 will be off because there is insufficient voltage across R1 to illuminate either one. Indicator NE2 will be off because only a positive voltage can light it, and NE4 will be off because the 250-volt DC signal is not high enough to break down the reverse junctions of diodes D3 and D4 in series with NE4 and R2.

If the capacitor under test is 0.1 μF or higher, the negative current flow will charge it through D1; however, when the current flow reverts to positive, D1 blocks the flow, which now is the combined voltage of T1's secondary in series with the charged capacitor. The combined voltage is now enough to break down the reversed junctions of D3 and D4, protected by current-limiter R2, and NE4 glows. A value below 0.1 μF will create a voltage lower than NE4 usually requires to conduct, so C14 is placed across NE4 to charge up to NE4's ionization point. Because of that, any capacitor that is below the normal value found in most microwave ovens will cause the NE4 to flash, due to the relaxation oscillator circuit. Capacitor values of 0.5 μF or higher will illuminate NE4 continuously, while smaller and smaller values will cause NE4 to flash slower and slower.

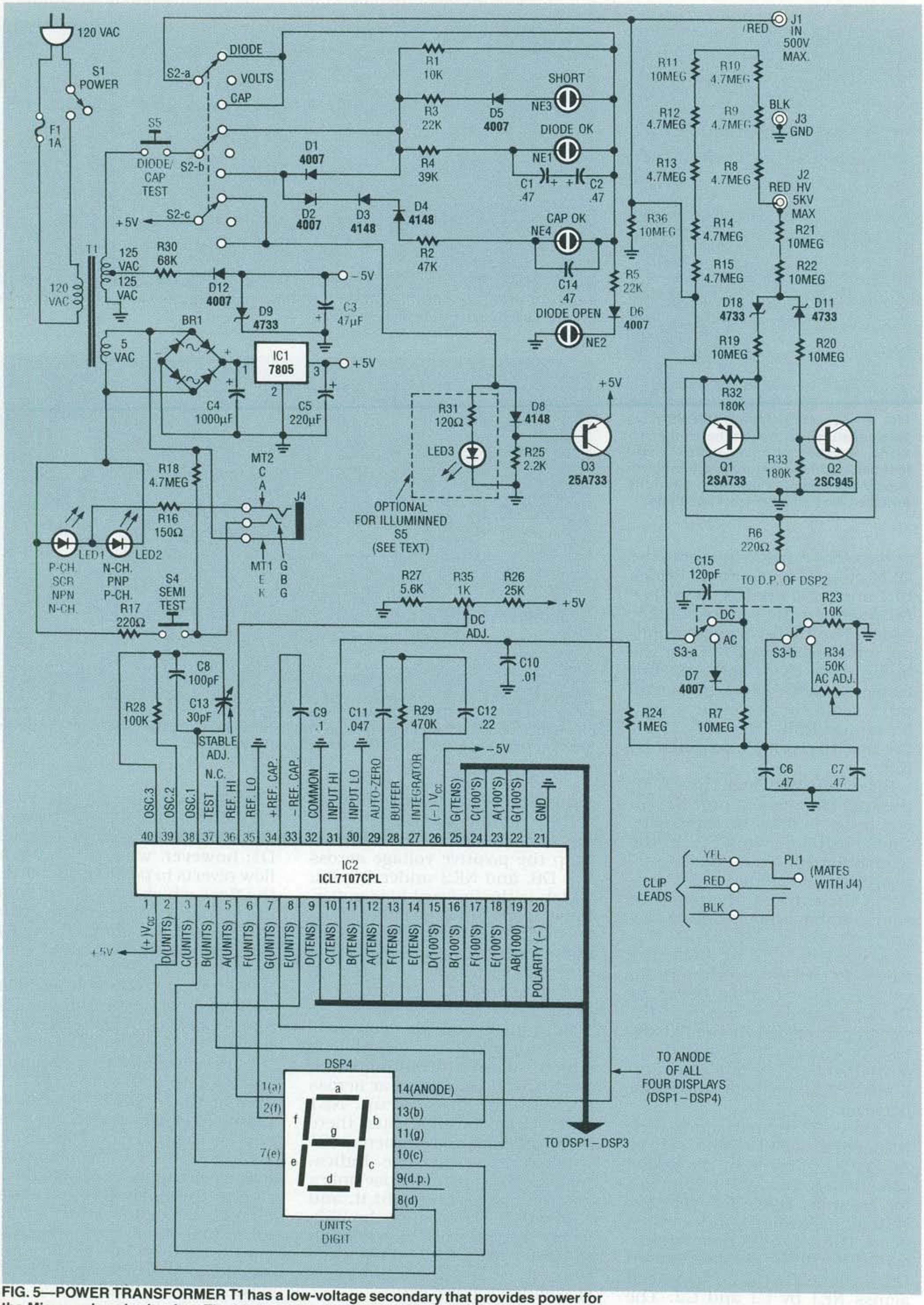

FIG. 5—POWER TRANSFORMER T1 has a low-voltage secondary that provides power for the Microanalyzer's circuitry. The high-voltage secondary provides 250-volts AC for the high-voltage diode and capacitor tester.

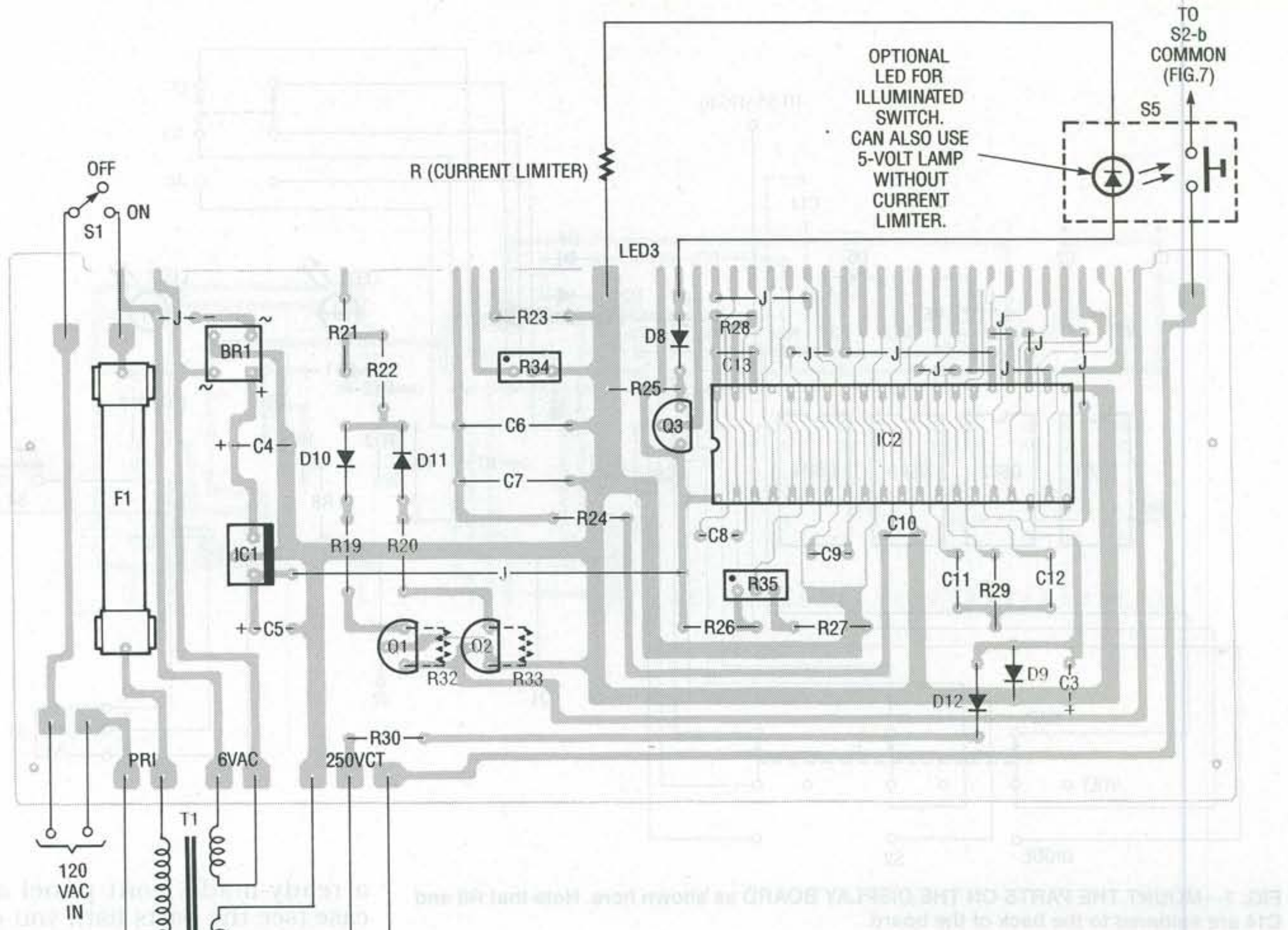

FIG. 6—ALL COMPONENTS ON THE MAIN BOARD are mounted on the component side except for R32 and R33 which must be tack-soldered to the solder side of the board.

One quirk of this circuit is that if the capacitor under test is shorted, not only will short-indicator NE3 glow, but so will NE1, the diode-OK indicator. Since a capacitor is under test here, the user can simply ignore the diode-OK lamp. If that is bothersome to the user, a 4-pole switch may be used for S2, with the fourth pole used to switch in NE1 in the "diode-test" position only.

The voltmeter circuit uses the popular 7107 DVM chip (IC2). The AC/DC switch (S3) switches D7 in or out so that IC2 always sees either positive or negative voltage, but never AC. Because the single diode is a half-wave rectifier, normally the reading will be only a small portion of the true RMS voltage; therefore, a second pole of S3 switches from R23 to a trimmer, R34, so that the meter can be adjusted to read the correct RMS voltage in the "AC" position. Because IC2 uses an on-board oscillator for the dual-slope integrating analog-to-digital converter, trimmer-capacitor C13 has been added across C8 so that the sampling frequency can be varied. If the trimmer capacitor is left out, any AC voltage readings may be unstable; therefore, the chip's sampling frequency can be adjusted to an exact multiple of the 60-Hz AC voltage to be measured.

Trimmer R35 is the basic reference-voltage adjustment used to calibrate the DVM on the lower scale DC measurement. The values of R7 and R23 or R34 will correctly divide the input voltage up to 500 volts AC or DC down to 2 volts for the DVM chip (IC2), but if anything up to 5000 volts must be measured, the voltage is passed through banana-jack J2 which uses R8–R15 for an additional 43 megohms to reduce the voltage to a compatible level.

The circuit containing Q1 and Q2 constantly measures the voltage at J2. If any AC or DC voltage appears at J2, one or both transistors are biased to turn on the decimal-point LED in the display.

Stereo phono-jack J4 is used for testing semiconductors. A matching phono plug, PL1, with a black lead on the outer conductor, a red lead on the middle conductor, and a yellow lead on the tip conductor, plugs into J4 and provides test clips to attach to components. The 5-volt AC source from T1 is passed through LED1 and LED2 through current-limiter R16. Both LED's will remain off when the test leads at J4 remain unconnected, but both will illuminate when the red and black leads are shorted. To test a semiconductor, connect the red lead to the collector of a transistor, the anode of an SCR, MT2 of a triac, or the drain of a MOSFET; connect the black lead to a transistor emitter, SCR cathode, triac MT1, or MOSFET source; and connect the yellow lead to a transistor base or gate of any other part. Pushing test button S4 will forward-bias the device and, depending on whether either, both, or neither LED lights, a semiconductor device can be tested for proper conductance. More details on the testing will be given later.

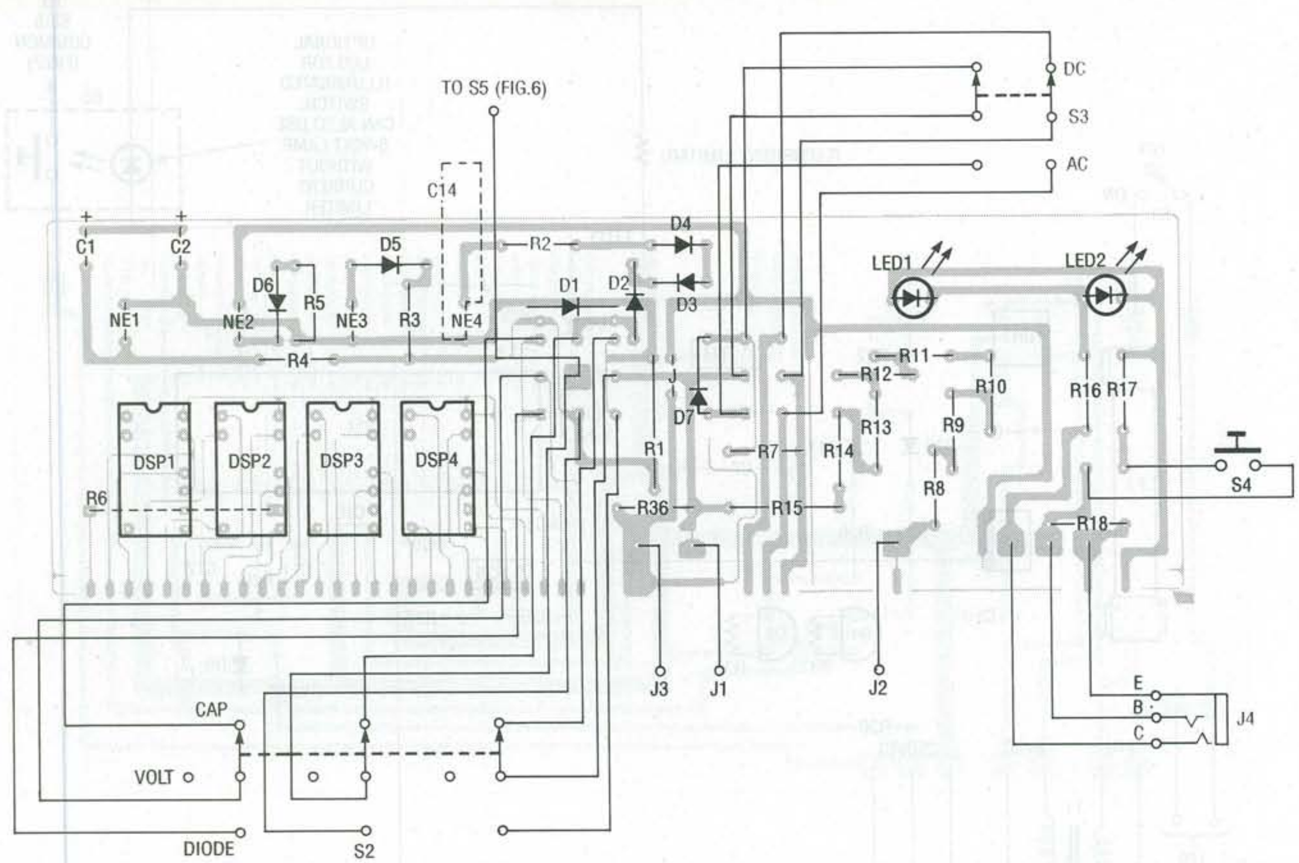

FIG. 7—MOUNT THE PARTS ON THE DISPLAY BOARD as shown here. Note that R6 and C14 are soldered to the back of the board.

Construction

The Microanalyzer consists of two single-sided PC boards: a main board containing the power supply and the DVM chip with auto decimal-point circuitry, and a display board containing the indicators, displays, switches, and test jacks. The display board is joined to the front of the main board by soldering interconnecting foils at their edges. We've provided the foil patterns in case you'd like to make your own boards. Alternatively, the boards, as well as complete kits, are available from the source mentioned in the parts list.

Almost all components, except the power transformer and switches S1 and S5, are mounted on the PC boards. Follow the parts layouts for the main and display boards, Figs. 6 and 7, respectively. Solder all jumpers on both boards first, followed by the fuse, resistors, trimmers, diodes, capacitors, transistors, regulator IC1, and sockets for the 7-segment displays and IC2, in that order; do not put IC2 in its socket just yet. Prepare switches S2–S4 by soldering 1-inch lengths of solid wire to the terminals to make them PC-mountable. Do not put too much solder on S2 or else it may not fit between the display board and front panel.

Mount, but do not solder the neons, LED's, and prepared switches in the display board. Insert the digital displays in their sockets. As indicated by the dashed lines in the parts-placement diagrams, tack-solder R32 and R33 to the back (the solder side) of the main board, and R6 and C14 to the back of the display board. Hold the display board in position next to the main board using the slots and bosses in both boards, and solder all of the foil connections, making sure that the boards are exactly perpendicular. Check all connections for solder bridges.

Solder the power-transformer wires to the main board, and solder three 4-inch wires in the holes marked for both switches S1 and S5. If you are using an illuminated switch for S5, install 6-inch wires in the holes marked LED3. Solder the power switch (S1) to its wires.

Assuming you have purchased a ready-made front panel and case (see the parts list), you can mount all of the jacks and indicator lenses on the front panel just like the prototype, and slip four ⅝-inch heat-shrink tubes over the neons. Otherwise you can make your own front panel in a similar fasion. Remove all hardware from S2–S4, but leave one nut on S3. Mount the front panel and the PC-board assembly in the bottom shell of the cabinet. The neons, LED's, and switches can now be extended to reach the panel to be mounted. Adjust the nut on S3 to match the shaft length of S2, and install and tighten the remaining hardware for all three switches. Solder the components after they have been mounted. Also mount S1 and S5 in the panel and wire them up; note that the other side of S5 is connected to the rear of the display board on the center contact of S2 (S2-b common).

Remove the assembly from the cabinet, turn it over, and wire up jacks J1–J4 to the holes marked on the display board using the shortest possible lengths of very thin solid wire. Remember to wire the LED3 wires to the indicator inside S5 only if a 5-volt bulb or LED is installed; the indicator will light only when the

PARTS LIST

All resistors are ¼-watt, 5%, unless otherwise indicated.
R1—10,000 ohms
R2—47,000 ohms
R3, R5—22,000 ohms
R4—39,000 ohms
R6, R17—220 ohms
R7, R11, R19–R22, R36—10 megohms
R8–R10, R12–R15, R18—4.7 megohms
R16—150 ohms
R23—10,000 ohms
R24—1 megohm
R25—2200 ohms
R26—25,000 ohms, metal, 1%
R27—5600 ohms
R28—100,000 ohms
R29—470,000 ohms
R30—68,000 ohms
R31—120 ohms (optional for illuminated S5, see text)
R32, R33—180,000 ohms
R34—50,000 ohms, 10-turn trimmer
R35—1000 ohms, 10-turn trimmer

Capacitors
C1, C2—0.47 µF, 350 volts, electrolytic
C3—47 µF, 16 volts, electrolytic
C4—1000 µF, 25 volts, electrolytic
C5—220 µF, 16 volts, electrolytic
C6, C7—0.47 µF, 100 volts, Mylar
C8—100 pF, polystyrene
C9—0.1 µF, 100 volts, Mylar
C10—0.01 µF, 100 volts, Mylar
C11—0.047 µF, 100 volts, Mylar
C12—0.22 µF, 100 volts, Mylar
C13—30 pF, ceramic micro trimmer
C14—0.47 µF, 200 volts, Mylar
C15—120 pF, 500 volts, silver mica

Semiconductors
IC1—7805 5-volt regulator
IC2— ICL7107CPL 3½-digit DVM chip
D1, D2, D5–D7, D12—1N4007 diode
D3, D4, D8—1N4148 diode
D9–D11—1N4733 5-volt Zener diode
BR1—ECG5304 400-PIV 1.5-amp bridge rectifier
Q1, Q3—2SA733PNP transistor
Q2—2SC945 NPN transistor
LED1, LED2—orange light-emitting diode
LED3—light-emitting diode or 5-volt lamp (optional for illuminated S5)
DSP1–DSP4—MAN 4710A common-anode 7-segment LED display

Other components
S1—SPST pushbutton switch
S2—3PDT C.O. switch
S3—DPDT switch
S4—SPST pushbutton switch
S5—SPST pushbutton switch (illuminated optional)
T1—120 VAC primary, 250 VAC C.T. 25 mA secondary, 6 VAC, 1 amp secondary
J1, J2—red banana jack, ½-inch
J3—black banana jack, ½-inch
J4—stereo mini phono jack
PL1—stereo mini phono plug
F1—1A, 250V pigtail fuse, Littlefuse 318.500
NE1–NE4—NE-2H neon indicators
Miscellaneous: Amerex 570 black cabinet, hardware, AC line cord, 3.5mm lamp lenses, wire, solder, etc.

Note: The following parts are available from EDS, Inc., 275 Rock Island Road, N. Lauderdale, FL 33068: Set of drilled and screened main and display PC boards for $25; kit of all parts and boards for $199; complete kit including Amerex cabinet with screened and machined front panel for $249. Please include $4 shipping for boards only, or $8 for kits. Florida residents must include 6% sales tax.

diode or capacitor functions are selected, while the digital display will illuminate only when the selector is in the "volt" position. Mount transformer T1 to the center floor of the cabinet using #8 bolts and nuts. Run the AC line-cord through the hole in the back of the cabinet and solder the leads to the main board. Install the line-cord strain relief; you may have to melt it to the inside of the cabinet for added strength. Finally, mount the assembly to the bottom shell of the cabinet and proceed with making of the test leads. Figure 8 shows the inside of the completed unit.

Because the unit will be used to measure potentials up to 5000 volts, it is important to use wire intended for use as test leads, such as the rubber-insulated variety. Solder fully insulated banana plugs to one end of the wires, and fully insulated alligator clips to the other end. The semiconductor test wire is made from an ordinary piece of 4-conductor telephone wire, with only the red, black, and yellow wires used. Solder a 3.5-mm stereo phono plug (PL1) to one end, being sure that the pin-out matches the jack (J4), and solder small IC clips or micro alligator clips to the remaining end.

After you have checked for solder bridges, bad connections, and proper component polarities and values, you can apply power. Measure the voltage at the positive terminal of C5; it should be +5-volts DC measured to ground. The anode of D9 should measure −5-volts DC, and the S5 pad on the main board should be 250-volts AC. If the voltages appear to be normal, turn off power and install IC2 in its socket. Turn on power and cycle S2 to be sure that the digital display and LED3 work properly. If everything looks good, plug in the high-voltage test leads and put S2 in the "diode test" position. Press S5 and verify that NE2 (open diode) illuminates. Short the test leads and press S5 again to see that NE3 (short) lights. Now, connect a high-voltage test diode with red at anode and black at cathode, and check that NE1 (diode OK) lights. Note that if the diode is connected backwards, all three diode-test lamps will illuminate simultaneously.

Check the capacitor-test functions with high-voltage capacitors rated between 0.01 and 1.0 µF and verify the correct functions of NE3 and NE4. Remember that voltages across the test leads can be as high as 700 volts p-p when S5 is pressed, so please be careful. Since the test voltages are fully isolated from the power line, and one hand is needed to push the test button, it would require a three-handed person to get a shock, but the warning is given anyway.

Next check the semiconductor tester. Plug in the 3-conductor test cord and connect the ends to an NPN transistor using red for the collector, yellow for the base, and black for the emitter. Without pressing S4, LED2 may be dark or slightly lit. That is normal reverse leakage for an NPN transistor, and will be brighter when testing low-voltage, high-frequency transistors. Pushing S4 will darken LED2 and brightly illuminate LED1, showing transconductance. Testing a PNP transistor should yield reversed indicators.

Test and calibration

To test and calibrate the voltmeter, you will need to construct a test jig using an actual microwave oven's power transformer. You will not have to remove the transformer, but just remember that during these tests that you will be exposing yourself to potentially lethal voltages. Use rubber gloves and have someone else nearby to supervise. Construct a string of five 1-megohm, ½-watt, 2% resistors from the transformer's high-voltage output to ground, with a 1N4007 diode and 0.01-µF/1kV ceramic capacitor connected as shown in Fig. 9. Disconnect the lead from the high-voltage output of the transformer to the high-voltage capacitor to keep the oven's magnetron from firing.

Connect a DMM (set to its highest DC voltage range) in parallel with the Microanalyzer's test leads, with red to the DC test point of the test jig, and black to ground. Be sure that both meters are set to DC and, after checking and covering all exposed connections, plug in and turn on the microwave oven. Using your DMM as a reference, adjust R35 for the same reading. Turn off and unplug the oven, and switch to the AC test point. Set both meters to AC, then turn on the oven again. If the digital display seems to be unstable or hunts up and down, adjust C13 with an insulated alignment tool until the readings settle down. After that has been done, adjust R34 for the same reading as your DMM. Turn off and unplug the oven, then move the red banana plug to the high-voltage test jack J2. Turn on the oven again and verify that the decimal point illuminates when voltage is present, and the reading of the display is shifted one digit to the left so that the display reads kilovolts to the nearest 120 volts. If the accuracy is poor, you can replace R11 (10 megohms) on the display board with different values from zero to 10 megohms. This completes all testing and calibration.

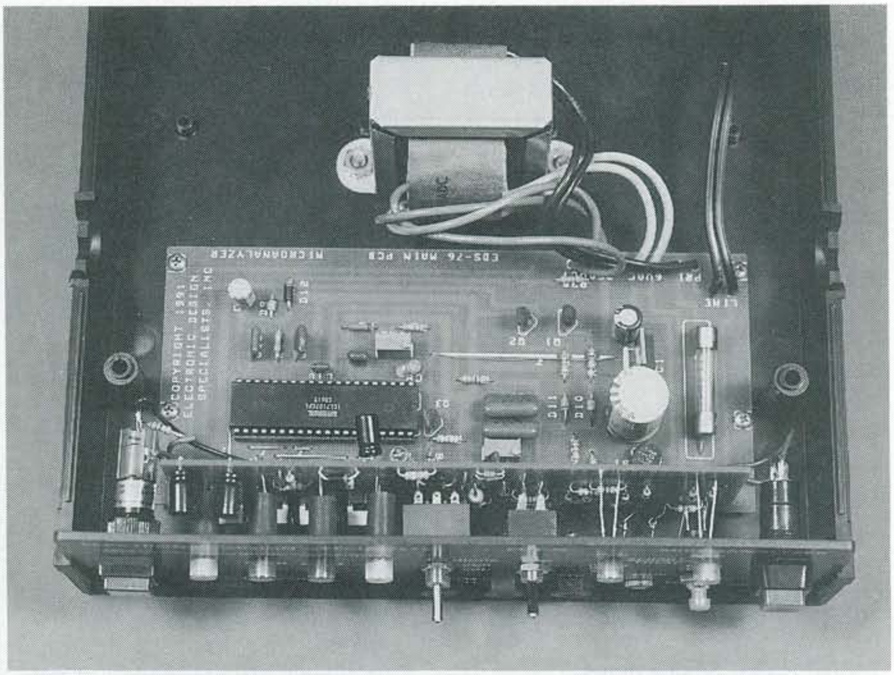

FIG. 8—THE INSIDE OF THE COMPLETED UNIT. The transformer and PC-board assembly are mounted in the bottom shell.

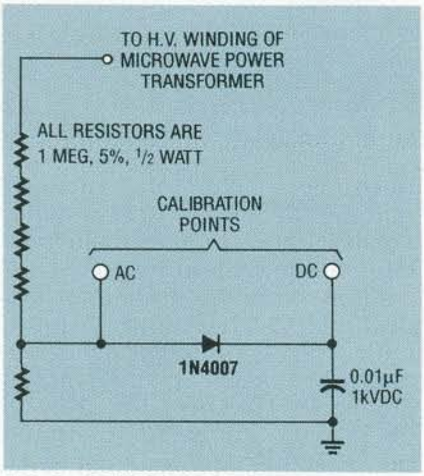

FIG. 9—CONSTRUCT A STRING of five 1-megohm, ½-watt, 2% resistors from the transformer's high-voltage output to ground, with a 1N4007 diode and 0.1-µF,1kV ceramic capacitor connected as shown.

Use

Since we have learned that microwave ovens are simple devices with a high-voltage power supply, magnetron tube, and some type of control circuit, troubleshooting is usually straightforward unless the oven has an intermittent problem. If an oven is "dead," check and replace, if necessary, the fuse with the correct type; most ovens use a ceramic self-quenching type fuse. Put a cup of water in the oven and fire it up. If there is still no function, or if it lights but doesn't heat, unplug the oven and discharge the capacitor by connecting a test clip to ground, touch one, then the other capacitor terminal to ground. Now using the clip, short across the terminals. Since this method discharges the capacitor through the transformer first, the discharge will be less violent.

The first type of tests are "static" tests, meaning that the components are checked with the oven unpowered and unplugged. Turn on the Microanalyzer and switch to "capacitor test." Connect the black lead to the capacitor terminal connected to the high-voltage secondary, and the red lead to the capacitor terminal connected to the anode of the high-voltage diode. Depressing S5 should indicate a good capacitor, with no flashing of the indicator. If the indicator flashes, or the short indictor lights, disconnect all wires to the capacitor and check it again.

If the capacitor checks out, move the black test clip to ground, with the red lead remaining connected to the anode. Switch to "diode test" and press S5. Remember that if the test leads are connected backwards, all three diode test lamps will light. When testing capacitors and diodes, keep S5 pushed in for a few seconds. All indicators should be steady, as flickering lamps may indicate an intermittent breakdown problem.

If the diode and capacitor are good, check the magnetron filament. Pull both wires off of the

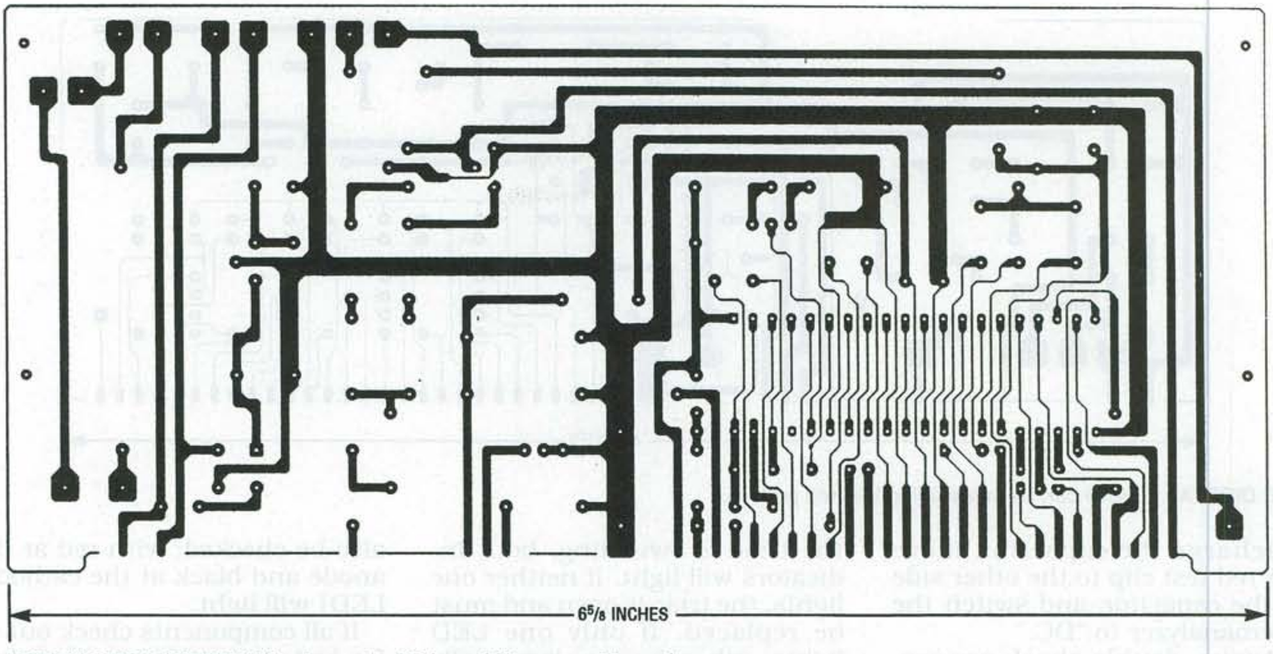

USE THIS FOIL PATTERN for the main PC board if you want to make your own.

filament connectors at the base of the magnetron, and with the black test wire still at ground, connect the red lead to either filament connector and push S5. The Microanalyzer should be in the "capacitor test" mode. The "short" lamp should be off, unless the cathode is shorted to ground; however, the "capacitor OK" lamp may flash very slowly, indicating that the RF bypass capacitors inside the magnetron are functioning. If the "short" lamp remains off, connect the red and black leads across the filament and push S5; because of the very low resistance of the filament, the "short" indicator will light.

If all tests so far have not found the defective component, and the oven still blows fuses when operated, the most likely cause will be an improperly adjusted or defective micro switch. With the oven unplugged, you can use the Microanalyzer as a continuity tester by connecting to each microswitch and operating the door mechanism slowly, observing that the indicators show open and short as each as each switch goes through its motions. A sticky switch in the wrong position may cause a short when another switch is cycled by opening the oven door. You should also check continuity of thermal switches mounted to the magnetron or oven cavity, if the oven remains dead.

If you suspect the power transformer, its three windings can also be checked with the Microanalyzer in the "capacitor test" mode. The primary and filament windings should cause the "short" indicator to light, but the high-voltage winding will cause the "diode open" and "short" lamps to illuminate together, because of the high reverse-EMF generated by the high windings count.

Assuming that you have checked all components mentioned so far and still have not found any defective components using the static test method, active tests must now be performed. If the oven seems to be working, such as the lamp lights and the fan blows, but there is no heat, additional tests must be done to check whether power is getting to the magnetron.

Plug in and turn on the oven; listen for the three-second delay, then the one-second buzz that all magnetrons emit when they fire up. If you do not hear the magnetron fire, unplug the oven and discharge the capacitor, then connect the red and black test leads across the primary of the transformer. Switch the Microanalyzer to "volts AC," and power the oven. If there is no voltage reading, there may be a problem with the triac, relay or whatever power-switching system is used. If 120 volts AC is present, the filament voltage should be measured next.

Disconnect the high-voltage wire from the filament connectors of the magnetron, so that only the filament wires are connected and, with the unit in the "AC" mode, connect the leads across the filament connectors and check for 3.1 volts AC when the oven is operated. If there is any corrosion on the terminal connectors, the low-voltage filament current will have trouble lighting the tube. Clean all connections with contact cleaner and make sure all connectors are tight. If the problem has not been found yet, we must measure the AC and DC high-voltages.

WARNING: This part of the dynamic test involves measuring potentially lethal voltages so extreme care must be exercised. Never exceed 500 volts AC or DC when measuring voltage at input jack J1. With the oven unplugged and capacitor discharged, connect the black test lead to ground, move the red test lead to the HV jack J2, and connect the red test-lead clip to the high-voltage winding of the power transformer connected to the high-voltage capacitor. Double check all connections, stand back, and fire up the oven. The AC voltage should be in the area of 1500 to 2500 VAC. If that checks out, turn off and unplug the oven and

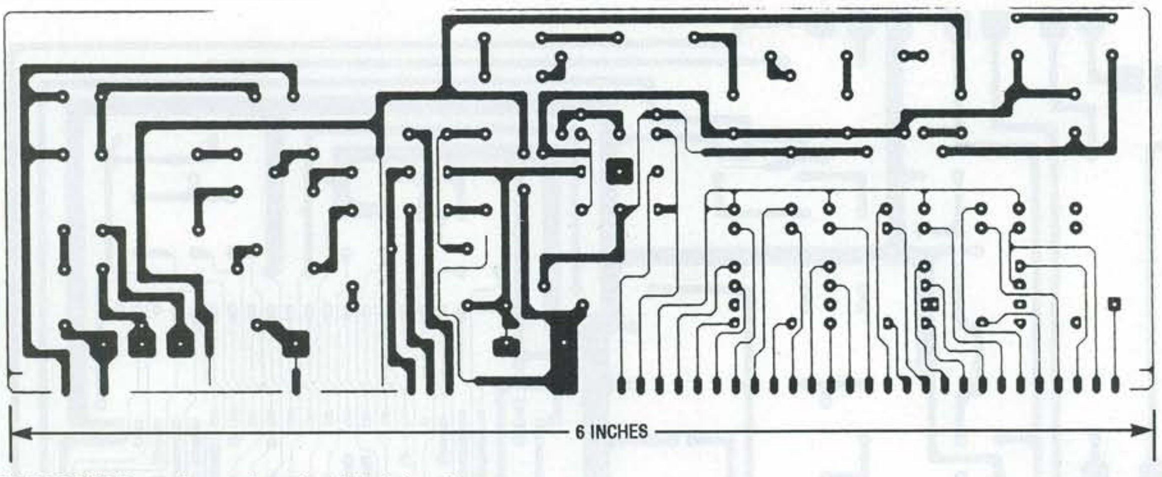

THE DISPLAY BOARD can be made using this foil pattern.

discharge the capacitor, move the red test clip to the other side of the capacitor, and switch the Microanalyzer to "DC."

Again, double check connections and fire up the oven. A normally operating oven will have a DC reading initially as high as 4.5 kV; as the magnetron fires up and current is drawn from the power supply, the reading will decrease to 2–2.5 kV and hold steady. Poor connections to the magnetron will usually show no voltage change, or a changing voltage as the connections make and break. A defective magnetron will either not fire and the high-voltage reading will remain high, or an intermittently shorting tube will cause the readings to be much lower than expected. Most better-quality ovens use a triac to power the transformer because they are much more reliable than a relay, but most technicians do not have a quick and positive way to test them. The Microanalyzer can be used to check the triac. The triac used in a typical microwave oven is usually either a one-inch square or round package about a half-inch thick with three terminals. The smallest terminal is the gate, or control pin, with the second main terminal (MT2) usually in the center, and the common, or first main terminal (MT1) opposite the gate.

Pull off the wires from the triac and connect the red test clip from J4 (the semiconductor test leads) to MT2, yellow to the gate, and black to MT1. Indicators LED1 and LED2 should be unlit; a shorted triac will light both LED's. Assuming the indicators are unlit, press test-switch S4; if the triac is switching, both indicators will light. If neither one lights, the triac is open and must be replaced. If only one LED lights, either the triac is partially defective, or it is an SCR.

If the oven uses a relay, open it and check for pitted or heat-damaged contacts; if required, burnish them, or replace the relay. If you believe the problem to be a relay drive transistor, the transistor may be tested by connecting the red J4 clip to the collector, yellow to base, and black to emitter. Initially, LED1 or LED2 may be lit dimly or may be dark, but pressing S4 will confirm the type and proper operation of the semiconductor. For the highest accuracy, the semiconductor may have to be removed from circuit if the readings in circuit are confusing. Triacs and SCR's should never light either indicator until S4 is depressed; a triac will light both LED's because it's an AC switching device, while an SCR or transistor will light only one indicator when S4 is pushed. NPN or PNP transistors may initially light either LED1 or LED2, but never both; if LED2 (N-CH) is lit before S4 is pressed, and dims after it is pressed, while LED1 illuminates, you have just checked a good NPN transistor. You must reverse readings for PNP.

MOSFET's, usually intimidating to test, are easily checked with the Microanalyzer. Initially, a P- or N-channel device will illuminate either LED1 or LED2 respectively, and pushing S4 will cause the opposite LED to light, but without causing the original lamp to dim like ordinary bipolar transistors. Ordinary diodes can also be checked; with red at the anode and black at the cathode, LED1 will light.

If all components check out so far, but your microwave oven has the symptom of low heating, but otherwise seems to be working normally, check the waveguide cover at the top of the oven cavity at the exit of the waveguide. If it is coated with grease or food residues, it can absorb a large amount of power. Clean it with ammonia and water or, if it's burnt, replace it with the same type of plastic or mica material. A malfunctioning stirrer can also cause problems; that can be checked without even removing the oven cover. Stick several NE-2 neon bulbs in a styrofoam cup filled with water, and turn on the oven. A properly operating oven will ionize the neon gas and the neon bulbs will flash on and off as the stirrer rotates. If some lamps remain on while others stay off, the magnetron is good; the stirrer is inoperative. Check for a broken belt or a seized bearing in the stirrer mechanism.

A quick and dirty method of measuring microwave power is to run the oven for one minute at full power with eight ounces of water in a styrofoam cup (remember to start with cold water); a 500-watt oven will make the water almost too hot to stick a finger in, while a 750-watt unit will cause the water to steam.

The final check should be a test of the door seal with a properly calibrated microwave leakage tester. Although the FCC allows five milliwatts per square centimeter, most ovens will have almost unmeasurable leakage. **R-E**