Digital meter for the blind

A three-decade instrument with audible balance indication

by T. C. R. S. Fowler, B.Sc.
University of Bristol

A combined recording level indicator and d.c. voltmeter built in 1972 for a blind man was the forerunner of the instrument to be described here. In the voltmeter mode the original instrument indicates the magnitude of the voltage by the frequency of an audible output note, and a 12-way switch enables any one of twelve reference voltages to be switched in for comparison. The reference voltages rise in constant-ratio ("3dB") increments from 50mV to 2.26V, an external attenuator being used at the input to provide higher voltage ranges as required.

At a later stage, the requirement arose for a wider range of reference voltages and it was decided to select the references by means of rocker switches in a binary-coded decimal array. Resistance measurement is now made possible, the complete instrument becoming a 3-digit volt-ohmmeter costing around £15.

Instead of giving a continuously-variable output frequency controlled directly by the input voltage, the digital instrument includes a comparator which causes the audible output frequency to change abruptly, generally from a steady high note to a steady low note, as soon as the reference voltage is made to exceed the voltage being measured; only if the two voltages are very nearly equal does the output frequency "dither" in the intermediate range. All three types of output sound are clearly identifiable, even by the non-musical!

The 12 rocker switches are arranged in three columns of four, with weightings of 4, 2, 2 and 1 in each column, most significant digit column on the left. In addition, a lever bar like the spacer bar on a typewriter actuates a microswitch and enables one further least significant digit to be added and removed repeatedly and easily. Thus the full-scale reading is "10.00" rather than "9.99", and the stabilized voltage is set to 10.000V when calibration is carried out.

To take a measurement, all rocker switches are initially set to "off" (left-hand side down); a high note output should result. The switches are then operated in order, starting with the most significant "4", each being left on if the note does not change, but switched off again if the note changes. Finally a stage is reached when operating the lever bar causes the note to change. The state of the rocker switches, representing the numerical value of the quantity being measured in 3-digit decimal form, is then read by touch by the operator.

Circuit description

Fig. 2 is the circuit diagram of the instrument with the reference voltage generator network shown in block form; the circuit of this network is given in Fig. 3, in which S_4 to S_{15} inclusive are the 12 rocker switches, and S_{16} the microswitch actuated via the lever bar.

An equivalent circuit for a reference voltage generator of this type comprises a direct voltage generator variable in steps between the terminal voltages of the stabilized power supply used and of a constant output resistance R_0 equal to that of all the digital-to-analogue network resistors in parallel. Here the equivalent generator is variable in 10mV steps from 0 to +10 volts, and $R_0 = 0.4R$, where R is the resistor associated with the most significant "4", viz. R_1 in Fig. 3. (It may be of interest to note that where the extra least-significant-digit facility is provided, as by R_{13} and S_{16} here, the relationship $R_0 = 0.1nR$ holds for any number of decades, where R is the "most significant" (lowest) resistor of the network and n is the numerical value associated with it.) To keep power consumption reasonably low yet the values of R_0 and the highest resistors R_{12} and R_{13} not unduly high, a value of approximately 5000 ohms was chosen for R. In practice, a 4.7kΩ (nominal value) high-stability resistor, measured and found to be of 4720 ohms, was used in the prototype for R_1 and as the basis for all the other resistors in the reference voltage network, giving $R_0 =$ 1888Ω and R_{12}, $R_{13} =$ 1.888 MΩ. In the prototype, a "main" resistor close to the required value was used in combination with one or more "auxiliary" resistors, in parallel, in series, or in series-parallel configurations; for example, for R_2 and R_3 a high-stability resistor of nominal value 10kΩ was used as the "main" resistor; shunting it with two resistors, nominally 470kΩ and 10MΩ respectively, gave the required value in both cases. Where, as in this example, the parallel resistors were of relatively high value, carbon film types were considered adequate.

On the 10V and 100/1000V settings, switch S_{2A} connects the output of the reference voltage generator directly to the inverting input of the comparator IC_1 (a "741" operational amplifier). On the other ranges, resistive attenuators are used, the constant output resistance R_0 of the reference generator giving attenuation.

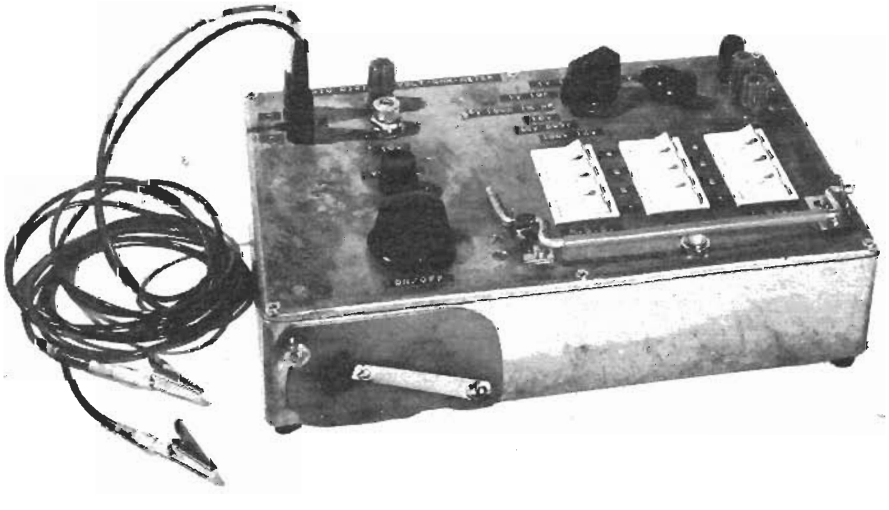

Fig. 1. The complete instrument. The multiplier lead may be substituted for one of the crocodile clip leads.

The voltage present between the input terminals is applied, virtually unattenuated on the 1V, 5V and 10V ranges, and attenuated by a factor of ten on the higher ranges, between the "0V" line and the non-inverting input of the comparator IC_1, switch S_{2B} being used to make the necessary connections. On the former group of ranges the 10kΩ resistor R_{18} and diodes D_1, D_2 and D_3 give overload protection, and R_{18} with C_2 provide smoothing; on the higher ranges R_{18} is replaced by the 1:10 attenuator network R_{17}, R_{19}, R_{20}, R_{21} and R_{22}, the last two resistors providing a small positive bias voltage which compensates for the effect due to the input current of IC_1 and the rather high output resistance (about 200kΩ) of the attenuator network.

The input resistance on the 50V and 100V ranges is very approximately that of R_{17} and R_{19} in series; viz. 2.22 MΩ. For the 500V and 1000V ranges the multiplier lead is used, adding approximately 20 megohms. Thus the instrument has a resistance of approximately 22,000 ohms per volt on the 100V and 1000V ranges, and 44,000 ohms per volt on the 50V and 500V ranges.

The output state of the comparator IC_1 is indicated by the audible output of the instrument, which is generated by Tr_1, Tr_2 and associated components forming an astable circuit, the emitter follower Tr_3, and the loudspeaker. Generally, of course, the output voltage of the comparator is "hard over" at either the upper or the lower limit, and the values shown for R_{23}, R_{24}, R_{35} and R_{36} were chosen to give a very distinct, though not extreme, frequency change when the comparator switches. The values of the capacitors C_4 and C_5 in the astable circuit were made unequal for power economy. The tonal quality of the output sound is considered not unpleasant, although the provision of a jack socket for headphone operation as an alternative to the loudspeaker might nevertheless be a worthwhile addition.

The connection of R_{23} to the "B+" line is used to give a rough audible indication of the positive battery voltage—if this is low, both frequencies from the astable circuit are appreciably lower than with the nominal 18 volts, though still remaining clearly distinguishable from each other. If the "B−" voltage is very low, the astable

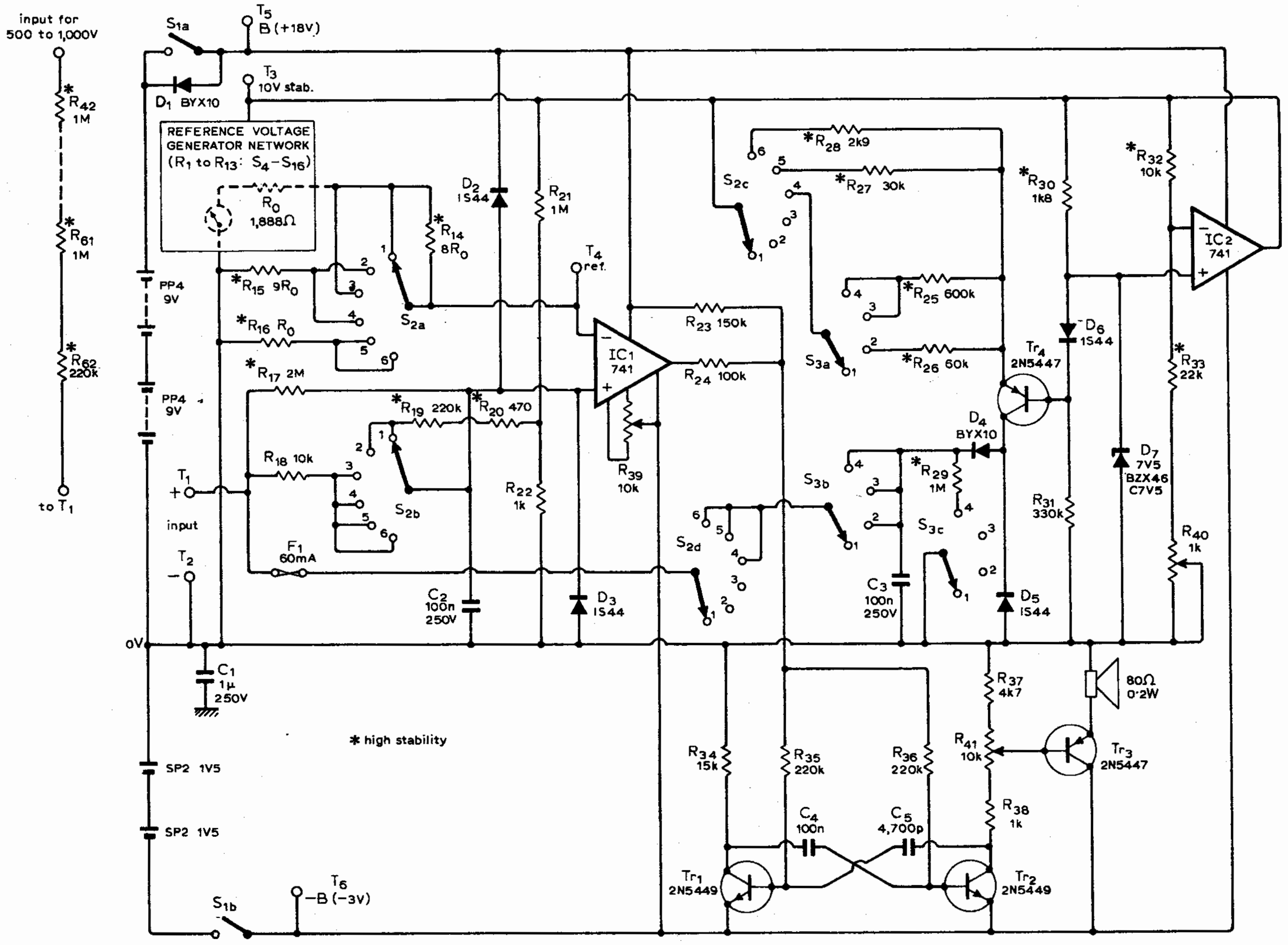

Fig. 2. Circuit diagram of the meter. Resistors marked with an asterisk are high-stability.

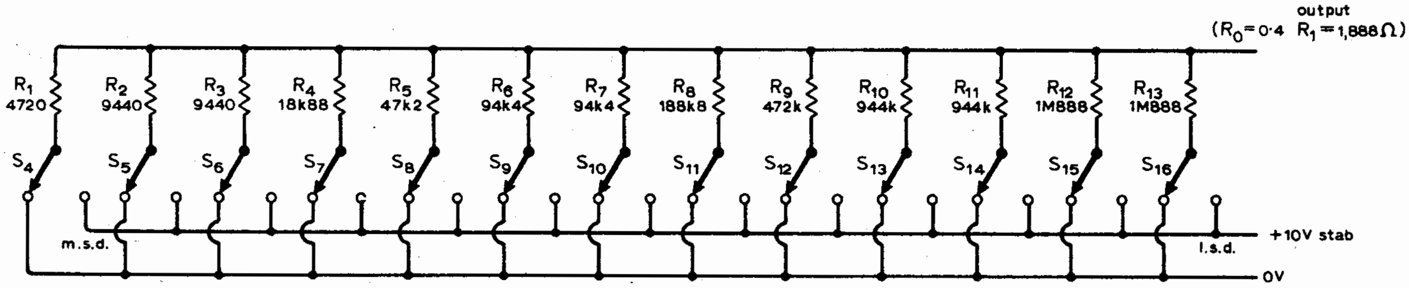

Fig. 3. Reference voltage generator network.

circuit will not operate. A further case of non-operation of the astable circuit should be mentioned here; it will not start if the B− voltage is switched on after the B+ voltage; this trouble can be obviated by the use, as in the prototype, of a two-position rotary wafer switch for S_1, the wafer contact being filed if necessary to ensure that the B− supply is always switched on first. No such filing proved to be necessary in the prototype, and non-starting has not been a problem.

The comparator offset adjustment potentiometer R_{39} is set so that on all the voltage ranges, with all the rocker switches set at "off", and the input leads short-circuited, the high output note results, but pressing the bar to add one least significant digit produces the low output note. (Once set, R_{39} should seldom need to be readjusted, so this trimmer is mounted on a circuit board rather than on the control panel.) The relevant reading is thus that obtained from the rocker switches when these have been set so that pressing the bar causes the output frequency to change; the extra least significant digit added by pressing the bar should not be included in the reading.

The necessary 10-volt stabilized supply is generated by means of a second 741 operational amplifier IC_2. Reference diode D_7 is nominally a 7.5V type, but in the interest of power economy it is run in this circuit at under 2mA and gives a reference of about 6.9V. The accuracy and stability of the "10-volt" line are nevertheless reasonably satisfactory, variations being typically less than ± 5 mV after an initial settling period. If a suitable digital voltmeter is available, the monitoring terminal T_3 and fine adjustment facility provided by R_{40} on the control panel make it easy for a sighted person to check and if necessary readjust the line to 10.000V.

The reference diode voltage also controls, via temperature compensator D_6, the base voltage of TR_4 which provides at its collector the selection of "constant" currents required for the various resistance ranges. These currents are 1mA, 100μA and 50μA, respectively, for the 1kΩ, 10kΩ, and 100kΩ ranges, and 5μA for both the 1MΩ and the "HR" range. Thus the full-scale voltage is 1V on the first two of these ranges (switch S_2 at positions 6 and 5 respectively, S_3 at "R"), and 5V on the other three (S_2 at position 4, S_3 at "R", "IM" and "HR" respectively).

Since the current from Tr_4 on each range is not completely independent of collector voltage, it is best to trim resistors R_{25} to R_{28} inclusive to give the correct current when the maximum resistance for the particular range is being measured, viz. 1MΩ, 100kΩ, 10kΩ and 1kΩ respectively, using a digital current meter between the resistor and the negative ("0-volt") input terminal. Once the correct current has been set up, the current meter should be removed from the circuit (or short-circuited) to eliminate the voltage drop introduced by it; accurate measurements of resistance should then be possible. The high-stability resistor R_{29} is switched in on the "HR" range; when R_{25} has been trimmed to give the requisite 5μA on the 1MΩ range, switching to the "HR" range should give a full-scale reading with no external resistor connected, i.e. with input terminals open-circuited. In the prototype it was preferred to set the current marginally on the low side, giving an open-circuit reading on the "HR" range of 0.995, so that the open-circuit reading would remain measurable even if there were a slight upward drift subsequently; using this method the quantity x, the reading obtained as a fraction of full-scale, referred to later, is strictly the reading divided by 0.995, but a good approximation for x when close to unity is obtained by subtracting the reading from 0.995, and subtracting the result from unity, e.g. a reading of 0.975, giving a difference of 0.02, would give $x = 0.98$. (If the open-circuit reading changes after a time, say to 0.997, this new value should of course be substituted for 0.995 in calculating x.) It might be worthwhile to add a front-panel trimmer for R_{25}, to enable the open-circuit reading to be set to full-scale each time the "HR" range was used, enabling x to be read directly.

Diodes D_4 and D_5 and the 60mA fuse are included to protect Tr_4 in the event of voltages being applied when the instrument is set to measure resistance; a high positive voltage will be "isolated" by the resulting high-resistance state of D_4, while if a negative voltage is applied D_5 clamps the collector of Tr_4 to the "0-volt" line, the fuse blowing if the current through the diodes is excessive. The current-generating circuit is disconnected from the input terminals in all cases except those in which the two selector switches, S_2 and S_3, are correctly set for a resistance measurement.

Choice of code

The 4,2,2,1 code was selected for use in this instrument in preference to the binary 8,4,2,1 code to make it impossible to set up a number greater than 9 in any decade, as this might be confusing. The digits 2 to 7 inclusive in each decade can thus each be set up in two different ways, which fact can be used for occasional "cross-checks", and for short cuts in getting a reading, e.g. if the first "2" has been found too large, the "1" in the same decade should next be tried, "by-passing" the second "2" switch, to save time in getting the reading.

It would appear that a 4,3,1,1 code and a 3,3,2,1 code would offer similar advantages, and there may be little to choose between these three codes from either mathematical or "hardware" considerations, but perhaps some "human factor" reason why one of the three codes is to be preferred. If it has not already been done, it would seem desirable to resolve this choice as soon as possible, so that an optimum standard code for this type of instrument can be made widely known.

Mains power supplies

Mains-derived d.c. supplies of similar voltage, viz. nominally +18V and −3V, may be used in place of the batteries; as mentioned above, there is considerable latitude on these values, +12V and −2V being adequate. The "B+", "B−" and "−" input terminal may conveniently be used for the connections, and as long as the on/off switch S_1 is left at "off" the batteries need not be removed; but if the positive supply voltage to be used exceeds the battery voltage the positive battery lead should be unclipped to prevent unwanted conduction through diode D_1; diode D_2 will of course continue to give overload protection as long as the positive rail remains connected to a low-impedance voltage source.

Construction

Fig. 1 is a photograph of the instrument, for which a die-cast box approximately 10.75×6.75×2.25 in. has been used.

All the signal terminals, switches and controls are mounted on the lid of the box, with labelling as shown for the benefit of sighted users or helpers. On the underside of the lid are the two electronic circuit boards —one carrying the d–a resistor network, the other all the active devices and associated components—most of the interconnecting wiring, and the fuseholder. The two boards have flexible lead connections and may be pivoted away from the underside of the lid for servicing, if necessary.

Only the battery housing and the loudspeaker are fitted to the lower part of the box. These are connected by flexible leads to the relevant points on the underside of the lid, so that the instrument can be operated with the lid removed and inverted for servicing, as shown in Fig. 4. A pivoted flap locked by a single knurled nut gives access to both battery housing tubes, one of which houses two PP4's for the positive supply, the other two SP2's for the negative supply. The loudspeaker is mounted facing downwards, a number of holes drilled in the base of the box, and the rubber feet which support the unit, providing an adequate air path for the sound; the speaker thus occupies no top panel space, and should also remain relatively dust-free.

For all external connections 4mm socket terminals are used. The two terminals on the left in Fig. 1 are the signal input terminals. For these two plain crocodile clip leads are provided, together with a third lead (not shown in Fig. 1) with an insulated probe clip and a multiplier box a few inches from the 4mm plug end, containing a series resistor chain which gives the multiplier lead a resistance of approximately 20 megohms. This multiplier lead is used, in either the positive (upper terminal) line or negative (lower terminal) line, as appropriate, in the measurement of positive and negative voltages in excess of 100 volts: it converts the 50-volt and 100-volt ranges to 500-volt and 1000-volt ranges. (Neither input terminal is connected to the case. Either can be so connected, as required.)

A little to the right of the input terminals are a monitoring terminal and screwdriver adjustment potentiometer for the 10-volt stabilized supply, while a fourth terminal, in the upper right-hand corner, enables the reference voltage present at the comparator to be monitored or connected to other equipment.

The two remaining terminals, also on the right-hand side of the panel, monitor the positive and negative battery voltages respectively. The instrument can be used to measure its own battery voltages, the positive one directly; the negative voltage can be measured by connecting to it the negative terminal of a 4.5-volt battery, measuring the net positive voltage and subtracting it from the external battery voltage.

Operation

The rocker switch array and l.s.d. micro-switch bar are clearly shown in Fig. 1. To the left of them are the on/off switch and volume control, and above them (i.e. further from the operator) are the two range selection switches. The right-hand range selection switch is set to the most anti-clockwise position ("V") for all voltage readings, and to the next position ("R") for all resistance ranges except "1M" (1 megohm), for which the third position of the switch is used, and "HR" (high resistance), for which the fourth, most clockwise, switch position is used.

With the right-hand switch set at "V", the left-hand range selection switch gives voltage ranges of 100V, 50V, 10V, 5V, 1V, and 1V (again), starting at the anti-clockwise limit. The first two of these ranges are converted to 1000V and 500V respectively by using the multiplier lead in place of one of the two direct input leads, as described above. On the 500V, 50V and 5V ranges the numerical value obtained from the rocker switches must be divided by two (or the switch weightings thought of as 2,1,1,½ instead of 4,2,2,1), so that the other ranges, on which the numerical value obtained is directly relevant, seem likely to be preferred except where maximum resolution is required.

With the right-hand range selection switch set at "R", resistance ranges of 1000 ohms, 10,000 ohms and 100,000 ohms are obtained from the left-hand switch set at positions 6 (most clockwise), 5 and 4 respectively. For the 1 megohm and high resistance ranges the left-hand switch is set at position 4 and the right-hand switch at "1M" or "HR" as required.

Measurement of resistance is straightforward on all but the "HR" range, i.e. the rocker switches having been set and read, and the position of the decimal point determined according to the range in use (as in voltage measurements), the numerical value obtained is a reading in ohms of the resistance connected between the input terminals. On the "HR" range the same constant current supply is used as on the 1 megohm range but, as R_{29} is included in the circuit, the reading obtained represents the resistance of this and the external resistor in parallel, from which the value of the latter can be calculated ($R=x/(1-x)$ megohms, where R is the external resistor being measured and x the reading obtained as a fraction of full-scale). This method is used to avoid the necessity for an even lower constant current supply on the "HR" range than the 5 microamps required on the 1 megohm range, as ideally the current used should be large compared with possible variations in comparator input current for the latter to cause negligible inaccuracy.

x	0.50	0.667	0.75	0.80	0.833	0.875	0.90	0.95	0.98	0.99
R (megohms)	1	2	3	4	5	7	9	19	49	99

Using the expression $\frac{1}{1-x}-1$ megohms for R may be found to simplify the mental arithmetic; the "-1" may be ignored with little error at very high resistance values. Where only a rough measurement of a high resistance is required, it may be found expedient to do a rough interpolation between a few memorized spot values on the "HR" range as shown in the table.

For the blind user wishing to avoid mental arithmetic completely, a comprehensive conversion table in braille for the "HR" range could be prepared, and might be worthwhile if many high resistance measurements to maximum accuracy were required. The "HR" range is the one rather complicated range to use on this instrument, but the facility it gives was considered worthy of inclusion.

In setting up the rocker switches according to the frequency (high or low) of the audible output, the operator performs manually a sequence of a type which is carried out electronically in certain a–d converters; this may sound laborious, but in practice proves quite quick and acceptable. A blind user has reported, after only a few days' use, that setting the switches takes very little time indeed, and has pointed out that when using his moving-coil multimeter he must allow a little time for the needle to settle before clamping it; and he considers the few seconds involved in setting the switches a small price to pay for the accuracy of the voltage and resistance measurements, which was just not available to him previously.

The readout from the rocker switches is of course of a clear and positive nature, requiring no braille labelling, and is hence readily usable also by blind people not familiar with braille, as well as by sighted people.

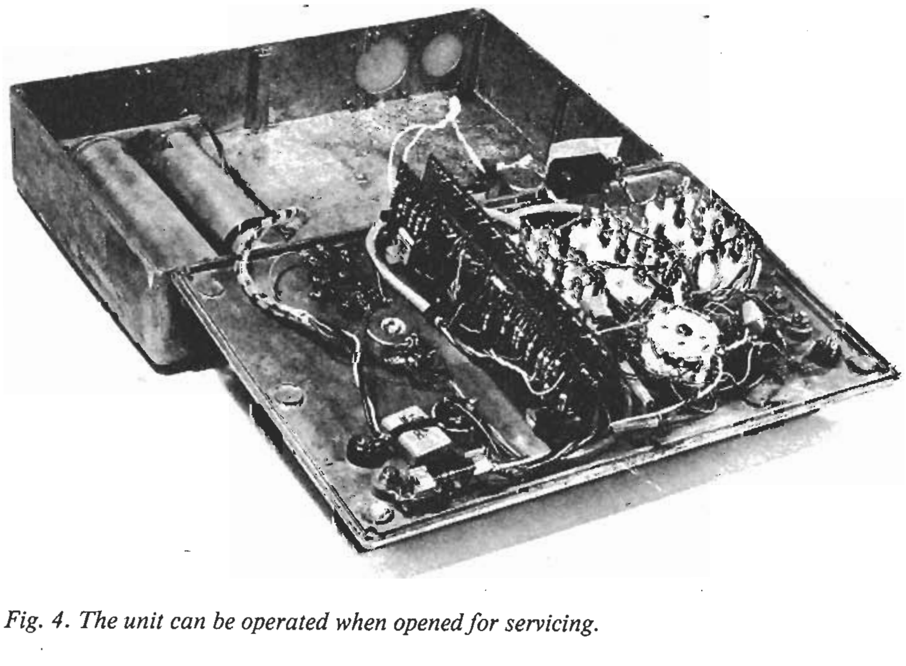

Fig. 4. The unit can be operated when opened for servicing.

About people

J. Stuart Sansom, O.B.E., F.I.E.R.E., has been appointed director of studios and engineering at Thames Television. Mr Sansom began his career in television in 1953 with a firm working on the development of high-quality telerecording systems, joining Television Wales and West in 1957 to become head of maintenance. He later went to ABC Television as head of development, in which capacity he was involved in the investigations into colour television systems prior to the final choice of PAL. He became chief engineer of Thames in 1966, and was appointed technical controller in 1970. Mr Sansom has served on many committees, including the EBU Technical Committee.

J. Stuart Sansom