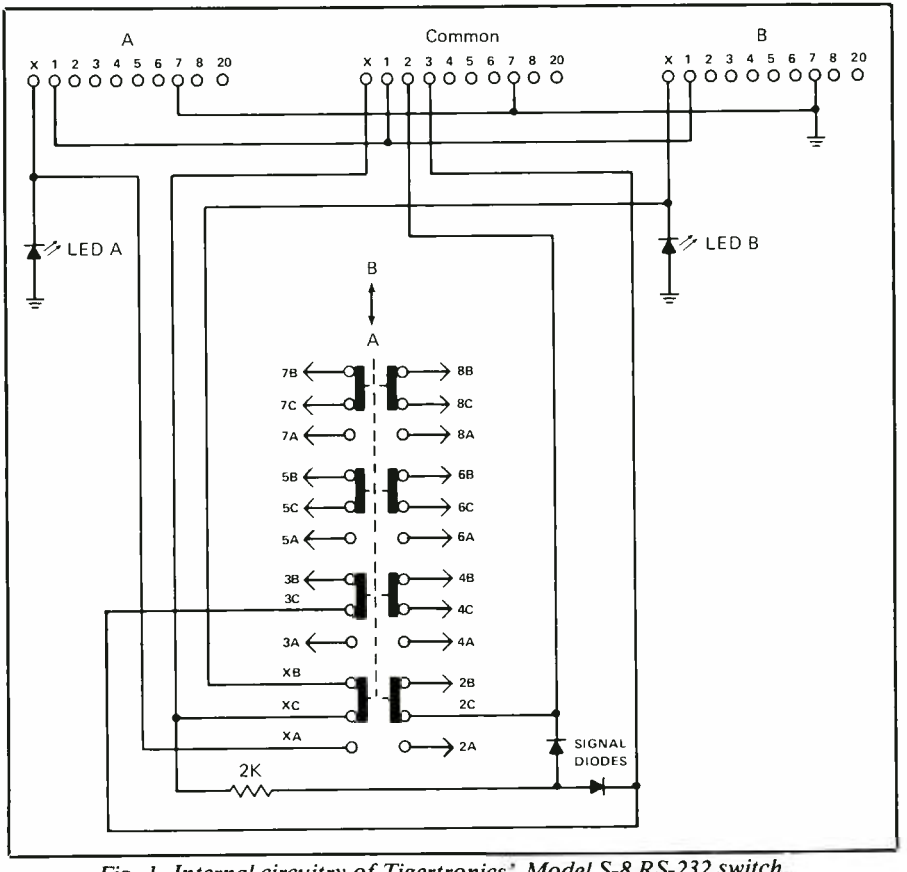

Fig. 1. Internal circuitry of Tigertronics' Model S-8 RS-232 switch.