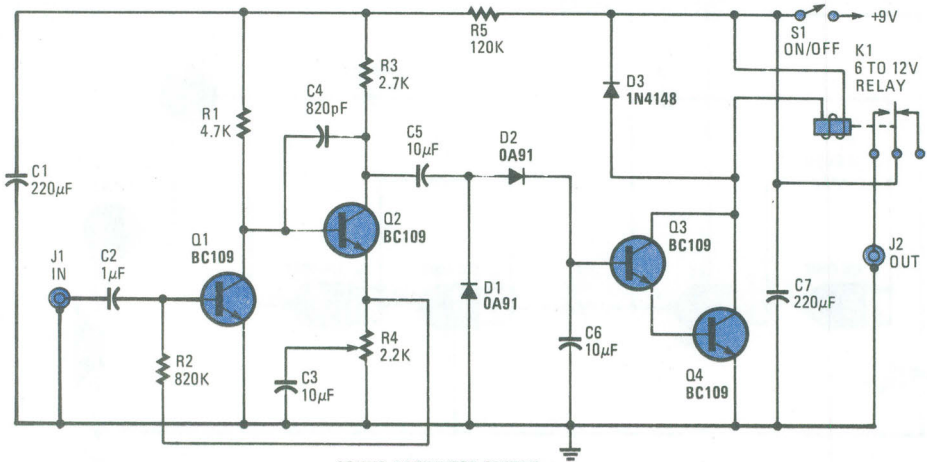

SOUND ACTIVATED SWITCH