Special Series

PRACTICAL OSCILLATOR DESIGNS

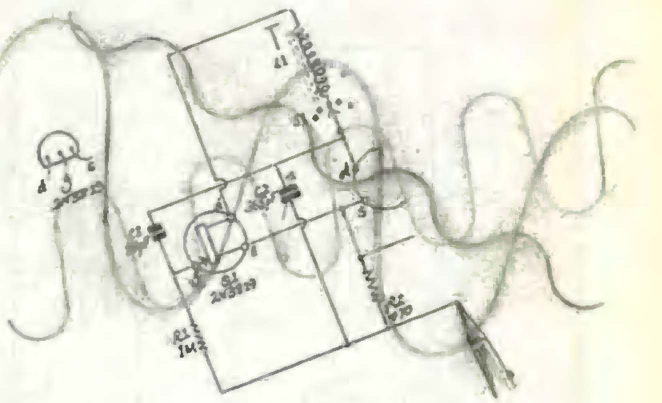

RAYMOND HAIGH

Most text books deal with oscillators in a theoretical way. This series, prepared with the electronics enthusiast and experimenter very much in mind, is intensely practical. Tried and tested circuits are fleshed out with component values, and their vices and virtues are exposed.

PART SIX– RESISTOR/CAPACITOR OSCILLATORS

SO FAR we have covered oscillators which rely on quartz crystals or inductors and capacitors to determine the operating frequency. In this final part of the series, circuits in which resistors and capacitors perform this function will be considered.

Resistor/capacitor (*R/C*) oscillators are widely used for the generation of specific waveforms (e.g., sine, square, sawtooth) over the 5Hz to 50KHz range. Circuits of this kind will oscillate from well below 1Hz to above 2MHz, but a high degree of frequency stability and waveform purity becomes increasingly difficult to achieve above 100kHz or so.

Resistors and capacitors fix the frequency of oscillation by controlling the phase of feedback, or by timing the action of switching circuits.

PHASE SHIFTING

The signal at the base (input) of a common emitter transistor stage is 180 degrees out of phase with the amplified signal at the collector (output). For oscillation to take place, feedback from collector to base must be in phase, and the output signal must, therefore, be shifted through 180 degrees.

This can be achieved by inserting a network of resistors and capacitors in the feedback path, the component values determining the frequency at which the desired phase shift takes place. In this way, the R/C network fixes the frequency of oscillation.

If care is taken with the associated circuitry, phase shifting R/C oscillators can generate sinewaves of high purity. The Wien bridge oscillator is the classic example of circuits of this kind. Here, the R/C network is configured to give zero phase shift at the frequency of oscillation.

RELAXATION OSCILLATORS

Capacitors take time to become charged when a d.c. voltage is applied across them via a resistor. The larger the values of resistance and capacitance in the series circuit, the longer the charging time.

The rising voltage across the capacitor, as it is being charged, can be used to trigger a change of state in a transistor switching stage. If this also results in the capacitor being discharged, the cycle will start again, and we have a circuit which oscillates at a frequency determined by the amount of resistance and capacitance.

PHASE SHIFTERS

A simple phase shifting oscillator suitable for generating spot frequencies is given in Fig.1. The usual formula relating frequency to resistance and capacitance in circuits of this kind is:

$$f = \frac{65000}{RC}$$

when f is in Hertz, R is in ohms, and C is in μF.

With this particular arrangement, the frequency of oscillation is usually about 20 per cent lower than the figure derived by calculation.

Arrangements of this kind are known as *relaxation oscillators.* They produce saw tooth or square waveforms which are rich in harmonics. Unijunction transistor and multivibrator oscillators operate in this way.

PHASE SHIFT OSCILLATOR

A simple oscillator in which a network of resistors and capacitors are used to shift the phase of the feedback is shown in Fig.1. Here, transistor TR1 is configured as a common emitter amplifier with the output developed across the collector (c) load resistor R2. Bias is applied via resistor R1.

In theory, a single resistor and capacitor combination can shift the phase of a signal through 90 degrees. This capability cannot be utilised in practice, however, because the signal is excessively attenuated.

Accordingly, three R/C elements, each shifting the phase by 60 degrees, are cascaded to produce the required 180 degrees phase inversion. Signal attenuation is reduced to acceptable limits, but the amplifier must still provide a gain of at least 29 times for oscillation to be maintained.

In Fig.1, the combinations of R3/C1, R4/C2, and the input resistance of TR1 (in parallel with R1) combined with capacitor C3, form the three stage phase shifting network. It should be noted that the capacitors and resistors in the network have the same value. Increasing the amount of resistance and/or capacitance will lower the frequency of oscillation: a reduction will raise it.

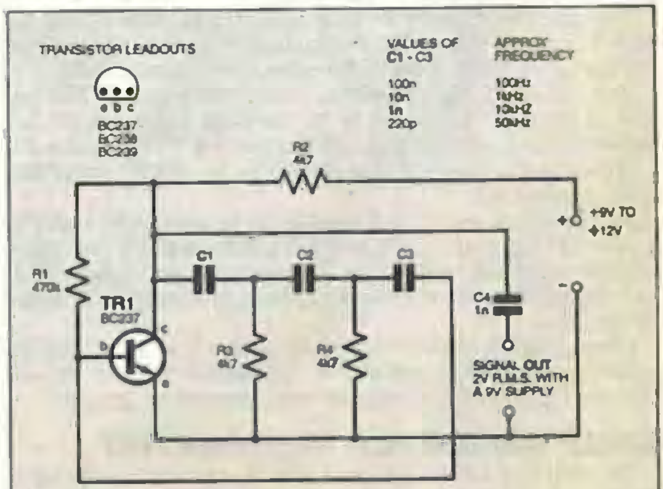

Fig.1. Circuit for a simple spot frequency sinewave oscillator.

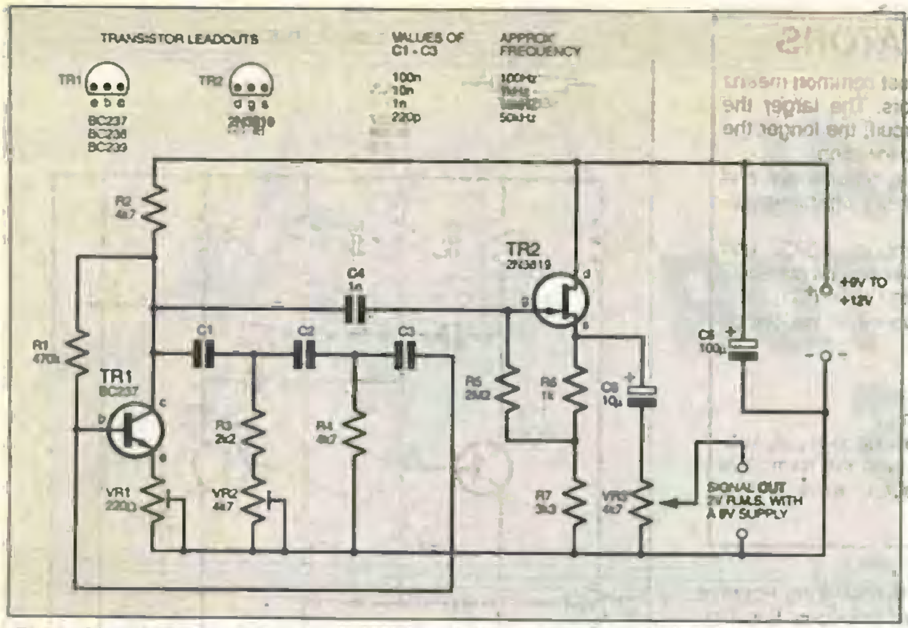

Fig.2. Circuit diagram for an adjustable spot frequency sinewave oscillator with an output buffer stage.

COMPONENTS

Capacitors used for phase shifting or timing should be polystyrene, polyester, or Mylar film types. When identical capacitors are required (see Figs.1, 2 and 3) they should be of 10 per cent tolerance or better.

Note that this only applies to the circuits given here. Some phase shift oscillators require 1 per cent tolerance components before they will operate reliably.

R/C OSCILLATORS

Combinations of resistors and capacitors can be used to fix the frequency of an oscillator. They do this in two ways:

(1) By determining the phase of signals in a positive feedback loop. Circuits of this kind can generate high quality sinewaves.

(2) By timing the switching of the maintaining devices between *on* and *off* states. Arrangements of this kind are known as *relaxation oscillators*. They generate square, sawtooth or pulse waveforms.

The circuit is essentially a spot frequency signal generator which can operate from below 50Hz up to more than 50kHz. Its output waveform is of tolerable quality, but the impedance of the accepting circuit must be high or oscillation may be inhibited. An impedance of 47kilohms, which halves the signal output, should be regarded as the acceptable lower limit for reliable oscillation.

IMPROVED PHASE SHIFT OSCILLATOR

With the addition of two pre-set resistors (potentiometers) and an output buffer stage, TR2, the performance of the circuit is considerably improved. The modified version of the circuit becomes an adjustable spot frequency oscillator and is shown in Fig.2. The upper frequency limit is around 60kHz, and the amplifier must have a gain of at least 29 times in order to maintain oscillation.

Negative feedback developed across the unbypassed emitter "resistor", preset VR1, reduces the gain of transistor TR1. Setting this resistor so that the circuit will only just oscillate results in the generation of a sinewave of high quality.

Replacing part of one of the resistors (R3) in the phase shifting network with pre-set VR2 enables the frequency of oscillation to be adjusted slightly. (At 10kHz it can be shifted by plus or minus 1·5kHz).

The f.e.t. (field effect transistor) source follower stage TR2 presents a very high impedance to the oscillator and a suitably low impedance to the accepting circuit. Gate resistor R5 is connected to a tapping on the source resistor formed by R6 and R7, rather than to the negative rail.

By this means, correct gate biasing can be maintained with TR2 source (s) held at about 4V, and this greatly improves the signal handling capability of the stage. Moreover, the gate resistor R5 is partially bootstrapped and this increases input impedance to almost 10 megohms.

Decoupling capacitor C5 will not be needed in all cases. Variable potentiometer VR3, connected to the source of TR2 by d.c. blocking capacitor C6, enables the output level to be adjusted.

WIDE RANGE A.F. GENERATOR

The frequency selective network at the heart of most audio signal generators was devised by Wilhelm Wien, a German physicist, about a century ago. Originally used as a measuring bridge, the combination of series and parallel R/C elements produces a network which imparts zero phase shift at one frequency.

Because there is no phase shifting within the R/C network at the frequency of oscillation, maintaining amplifiers for Wien bridge oscillators must have two stages. (Each stage imparts a shift of 180 degrees and this results in the output being back in phase with the input). Provided the gain of the amplifier is three times or greater, oscillation will be maintained. With such a modest gain requirement it is not difficult to apply heavy negative feedback in order to stabilise signal amplitude and improve waveform quality.

Wien bridge oscillators vary in complexity, and a simple, inexpensive, yet very effective version of the classic circuit is given in Fig.3; a low distortion A.F. Signal Generator. Here, the Wien network is placed in a positive feedback loop around a 741 operational amplifier i.c. (The feedback must be in phase, so the non-inverting input at pin 3 is used.)

A low current filament lamp LP1 shunts a negative feedback path (between output pin 6, and inverting input pin 2) in order to stabilise the amplitude of oscillation. Bridge capacitors, C1 to C8, are selected by ganged rotary switch S1a and S1b. The specified values more than cover the entire audio frequency spectrum.

Ganged potentiometers, VR1a and VR1b, form the resistive arms of the bridge and set the frequency. Range limiter resistors R1 and R2 ensure consistent operation over the full sweep of the potentiometers.

AMPLITUDE CONTROL

In order to obtain a high quality sinewave, signal amplitude must be kept below the level at which the maintaining amplifier begins to overload. (Overload causes clipping or flattening of the waveform peaks).

Automatic control of signal amplitude in Wien bridge oscillators is usually effected by an R51 type thermistor (temperature dependant resistor). These devices are sensitive but expensive, and here an ordinary low-current filament lamp is used in its place.

The resistance of a lamp filament rises dramatically when current flows through it and raises its temperature. If the output at pin 6 increases, more current flows and its resistance rises. Lamp LP1 is connected as the lower arm of a potential divider, VR2/R3 forming the upper section. An increase in the resistance of the lamp will, therefore, increase the amount of gain-reducing negative feedback and hold the signal amplitude constant.

In practice, preset VR2 is adjusted to give the highest possible output consistent with a perfect sinusoidal waveform. If an oscilloscope is not available to display a trace, good results can be ensured by setting VR2 so that oscillation is only just maintained. A 47 ohm pre-set should be substituted for VR2 and R3 if a supplier can be found.

There is some amplitude "bounce" when the frequency is changed rapidly, and this is a feature of all Wien oscillators which incorporate a temperature dependant resistor as a control element (the resistance heats and cools comparatively slowly). Circuits using f.e.t.s as voltage-variable control resistors, or diodes as amplitude limiters, have been devised to overcome this "bouncing". However, unless the design is complex, they usually exhibit higher distortion.

OUTPUT LEVELS

The simple control circuitry places a rather low resistance across the amplifier output, and the signal voltage available before the onset of distortion is limited to around 1V r.m.s. A larger output is often desirable, and the buffer stage transistor TR1, in Fig.3, provides a modest amount of signal amplification.

RELAXATION OSCILLATORS

Charging a capacitor, via a resistor, is the most common means of fixing the frequency of relaxation oscillators. The larger the capacitance and/or resistance in the series circuit, the longer the charging time and the lower the frequency of oscillation.

A widely used circuit of this kind is the astable multivibrator, and a version which permits some adjustment of the operating frequency is given in Fig.4.

The frequency determining networks comprise R3/C2 and R5/C1. For an equal mark/space ratio (*off* pulses and *on* pulses of equal duration), R3 and C2 must be identical to R5 and C1.

A very approximate formula relating frequency to resistance and capacitance is:

$$f = \frac{700000}{RC}$$

when f is in Hertz, R is in ohms, and C is in μF.

The frequency of oscillation is very dependant upon supply voltage and, to a lesser extent, transistor types, and the formula is inevitably approximate. The output is a square wave with a rounded leading edge.

Emitter (e) resistor R5 is unbypassed, and the resulting negative feedback reduces gain to the required level and improves linearity. In theory, the gain of this stage is approximately VR3 divided by R5 (i.e., four times), but, in practice, it is rather less than this. Base bias is provided by resistor R4. C10 is a decoupling capacitor, and C11 blocks the flow of d.c. into the accepting circuit.

PERFORMANCE

Although simple and inexpensive, the A.F. Signal Generator circuit performs well when preset VR2 has been correctly adjusted. Distortion figures as low as 0·1 per cent are claimed for circuits of this kind, and a check with an oscilloscope will reveal that the sinewave is of high quality.

Output level remains constant over fairly wide shifts in supply voltage, and across the switched ranges. Oscillation is maintained up to 70kHz, but performance begins to fall off a little after 30kHz or so.

Constructors would have to commit themselves to considerably more expense and effort in order to realise any significant improvement on this circuit. Note that the oscillator will not function correctly if a lamp with a higher wattage rating, or a lower working voltage than 6V, is fitted.

RELAXATION OSCILLATORS

The most common form of relaxation oscillator is the astable (i.e. non-stable) variant of H. Abraham and E. Bloch's multivibrator. Conceived by the two Frenchmen in 1918, the name "multivibrator" was given to this type of circuit because the output is rich in harmonics (they can extend beyond the thousandth). A typical circuit arrangement, with the addition of frequency adjusting refinements, is given in Fig.4.

Two common emitter transistor stages, TR1 and TR2, act as switches, and their bases and collectors are cross coupled by capacitors C1 and C2. Base biasing is supplied by R3 and R5. These resistor and capacitor combinations, R3/C2 and R5/C1, act as the timing networks which determine the frequency of oscillation.

The coupling capacitors alternately charge, via the bias resistors, and discharge, via the transistors, and the rising and falling voltages on the capacitors switch the transistors on and off, thereby maintaining the circuit action. The frequency at which the switching, or oscillation, takes place is, of course, determined by the time constants of the R/C combinations.

Collector loads are formed by resistors R2 and R7. Capacitor C5 decouples the circuit from the supply line and C4 blocks the flow of d.c. into the accepting circuit.

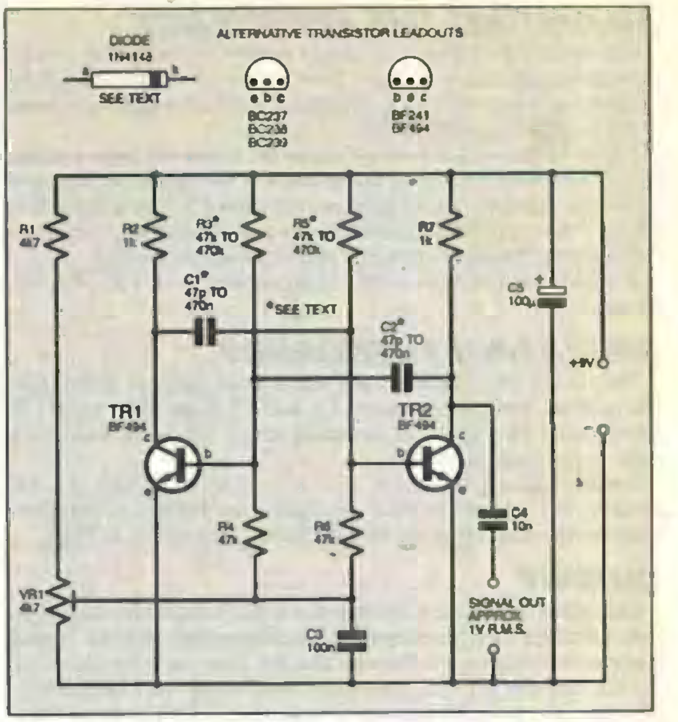

Fig.4. Circuit for an astable multivibrator, with frequency shifting arrangement.

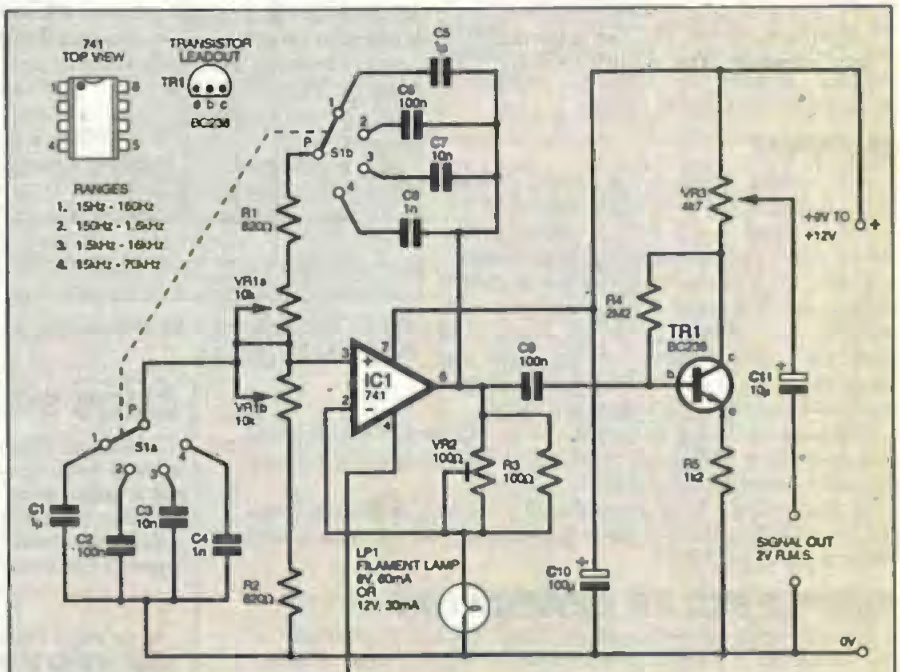

Fig.3. Circuit diagram for a low distortion a.f. signal generator.

WIEN BRIDGE

A network of resistors and capacitors, known as a Wien bridge, is used to determine frequency in most professional audio oscillators. With this network, phase shift is zero at one particular frequency. A typical circuit is given in Fig.3.

The resistors and capacitors in each arm of the bridge (VR1a/VR1b and C1/C5, C2/C6, etc.,) are of equal value, and the standard formula relating frequency to resistance and capacitance is:

$$f = \frac{160000}{RC}$$

when f is in Hertz, R is in ohms, and C is in μF. The actual frequency of oscillation is around 10 per cent lower than the figure indicated by calculation, and the ranges quoted in Fig.3 are based on actual measurements.

The amplifier need only have a gain of three times for oscillation to be maintained. This modest requirement permits the use of heavy, amplitude controlling negative feedback, and the quality of the generated sinewave can be extremely high.

ADJUSTING THE FREQUENCY

The operating frequency of simple astable multivibrators is very dependant upon supply voltage. Their frequency can also be shifted by applying a variable bias to the base (b) of the transistors in order to modify the triggering action.

Potentiometer VR1, connected across the supply via range limiting resistor R1, varies the voltage on the bases of the transistors. Resistors R4 and R6 isolate the signal paths and capacitor C3 decouples the bias supply. This arrangement permits a fairly wide adjustment of the nominal operating frequency, typically plus or minus 20 per cent.

If a basic multivibrator is all that is required, omit VR1, R1, R4, R6 and C3.

OPERATING FREQUENCY

The timing (bias) resistors R3 and R5 can range in value from 47k to 470k, and the capacitors, C1 and C2, from 47pF to several microfarads. This gives an operating range extending from sub-audio frequencies to 2MHz.

Small signal a.f. transistors can be used up to 100kHz, but r.f. devices will ensure reliable oscillation at higher frequencies. Suitable transistor types are also included in the circuit of Fig.4.

OUTPUT

The output waveform is rectangular with a rounded leading edge. This rounding can be eliminated by connecting 1N4148 diodes between the transistor collectors and the coupling capacitors, C1 and C2 (cathode (k) to collector (c)). Additional one kilohm resistors must be connected between the diode anodes and the positive supply rail to maintain the circuit action.

If the timing networks, R3/C2 and R5/C1, are identical, the mark/space ratio of the output waveform will be equal. They do not, of course, have to be the same, and by tailoring the component values, pulses of short duration separated by comparatively long time intervals can be generated.

CMOS SQUARE WAVE GENERATOR

A CMOS (complimentary metal oxide semiconductor) digital i.c. can be used as an excellent square wave generator. A typical circuit is given in Fig.5, where the inputs to three of the NOR gates in a 4001B i.c. are wired together to form inverting amplifiers. A resistor/capacitor timing network is connected in the feedback path between gates IC1a and IC1b. The third gate, IC1c, is used as a buffer stage.

Capacitors C1 to C6, selected by rotary switch S1, enable the unit to cover from 10Hz to above 250kHz. Potentiometer, VR1, acts as the frequency control by varying the charging and discharging time of the capacitors. Range limiting resistor R2 ensures consistent performance over its full sweep.

OUTPUT

The loading effect of the output control VR2 reduces the available signal level, which is equal to the supply voltage when the oscillator is fed into a high impedance.

Frequency is affected by changes in supply voltage, but to a much lesser extent than the multivibrator circuit given in Fig.4. The mark/space ratio is almost exactly equal, and the square wave is of excellent quality. Output is constant over the entire operating range.

Reducing the timing resistor R2 below 10k pushes the operating frequency up to 2MHz and more on the highest frequency range, but performance becomes erratic.

Most inverting CMOS gates should work well in this oscillator, and the 4011B (quad two-input NAND gate) has the same pinout connections as the 4001B.

SIMPLE PULSE GENERATOR

In many cases the nature of the waveform is not important: all that is required is a signal to test or trouble-shoot a piece of equipment, or to generate an audible tone.

A very simple and inexpensive oscillator circuit, suitable for tasks of this kind, is shown in Fig.6. Here a 555 timer, connected as an astable multivibrator, generates a pulsed waveform. Various ranges are selected by switch S1 and potentiometer VR1 sets the frequency of oscillation.

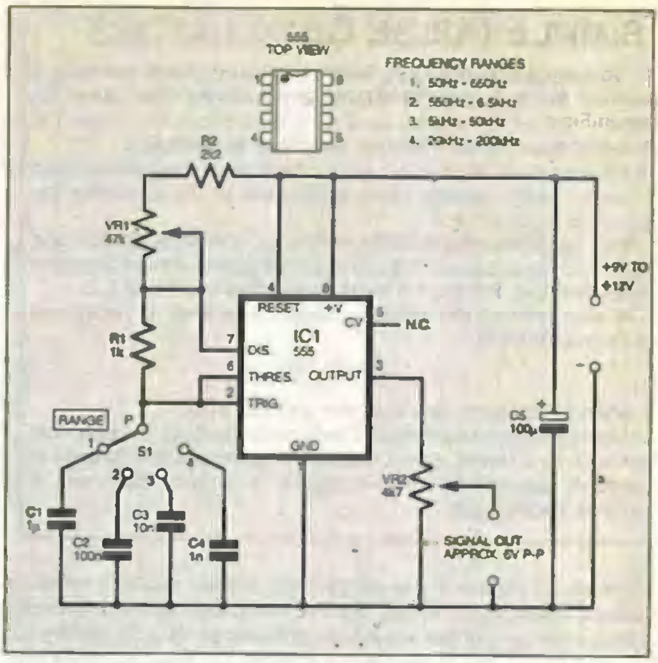

Fig.6. Using the renowned 555 timer l.c. to produce a 50Hz to 200kHz pulse generator.

The timing capacitors, C1 to C4, are charged via R1, VR1 and R2, but they discharge more rapidly through resistor R1. The output at IC1 pin 3 is, therefore, a chain of pulses, and adjustment of VR1 will alter both the frequency and the mark/space ratio of the output. Increasing the value of VR1 to one megohm will maximise the frequency sweep with a single capacitor. A sawtooth waveform is available, at high impedance, across the timing capacitor.

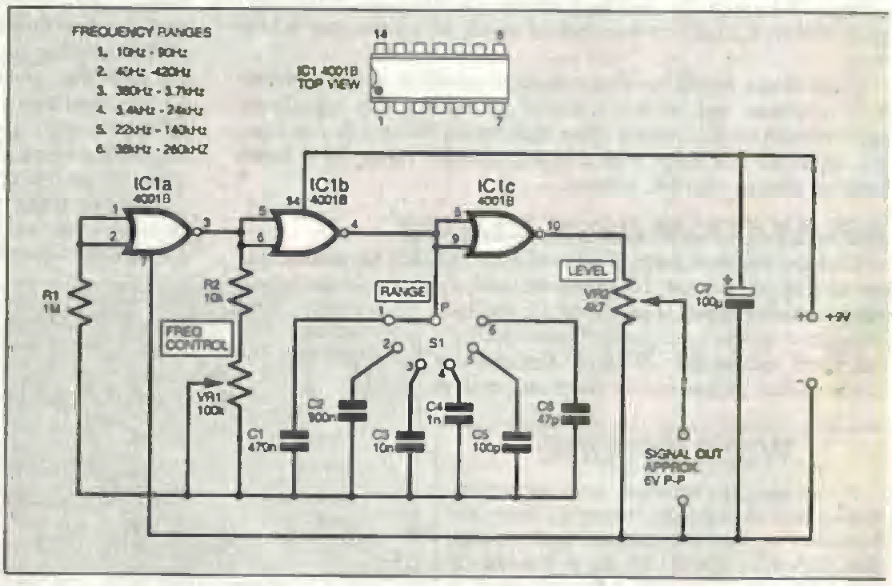

Fig.5. Circuit diagram for a wide range, square wave generator using a 4001B quad 2-input NOR gate l.c.

CMOS SQUARE WAVE GENERATOR

CMOS digital i.c.s can be configured as relaxation oscillators in order to generate square waves of excellent quality. A typical circuit is given in Fig.5, where R2 and VR1, together with a capacitor, C1 to C6, determine the frequency of oscillation.

The usual formula relating frequency to resistance and capacitance for this circuit is:

$$f = \frac{450000}{RC}$$

when f is in Hertz, R is in ohms, and C is in μF.

The formula gives tolerably accurate results at low frequencies but, above 1kHz or so, the frequency of oscillation is lower than the figure given by calculation. The ranges quoted in Fig.5 are based on actual measurements.

The circuit delivers a square wave of excellent quality with an equal mark/space ratio.

SIMPLE PULSE GENERATOR

The ubiquitous 555 timer i.c., when connected as an astable multivibrator, forms a very simple pulse generator. A typical circuit is given in Fig.6.

An approximate formula for the calculation of frequency, with this particular circuit, is:

$$f = \frac{2800000}{(R + 2000)C}$$

where f is in Hertz, R is the total value of VR1 and R2 in ohms, and C is in μF.

The formula is reasonably accurate up to 5kHz or so, then the frequency of oscillation is lower than the figure indicated by calculation. Again, the ranges quoted in Fig.6 are based on measurement, not calculation.

When a very simple and inexpensive means of trouble shooting audio equipment is required, this circuit is hard to beat. The upper frequency limit extends a little beyond 200kHz.

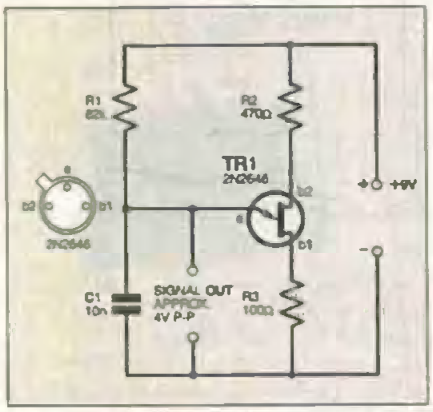

Fig.7. Simple sawtooth generator. With the values specified for R1 and C1 the circuit wil oscillate at 1kHz approx.

If the simplest possible spot-frequency signal generator is required, VR1 and R2 can be replaced by a single fixed value resistor. A capacitor can be permanently wired between IC1 pin 2 and the negative supply rail, and VR2 can be deleted. A 100k resistor and a 100nF capacitor in the timing network should make the circuit oscillate at around 1kHz.

Provided the supply voltage is held between 8V and 12V, variations have a minimal effect on the frequency of oscillation. Wider excursions cause significant shifts.

SIMPLE SAWTOOTH GENERATOR

A device known as a unijunction transistor can form the basis of a simple sawtooth generator. Used almost exclusively in relaxation oscillator circuits, it comprises a tiny strip of *n*-type silicon material with non-rectifying junctions (base 1 and base 2) located at either end. A rectifying junction (emitter) is formed in a region of *p*-type material along its length.

The device acts as a voltage triggered switch. A typical sawtooth generator circuit is given in Fig.7, where resistor R1 and capacitor C1 determine the frequency of oscillation and R2 and R3 stabilise the transistor against temperature variations.

Emitter (e) impedance is high when the device is off (not conducting) and low when it is on. When the supply is first connected, capacitor C1 is discharged, the emitter is at zero potential and presents a high impedance to the capacitor, enabling it to be charged via resistor R1.

When a critical voltage (known as the "peak" point) has been developed across the capacitor, the unijunction triggers to the on state and the capacitor discharges through the now low impedance emitter circuit. The voltage falls to zero, the process is repeated, and oscillation is maintained.

A positive going pulse is available at base 1, a negative going pulse at base 2, and a sawtooth (strictly speaking a "shark's fin") waveform at the emitter. The impedance of any accepting circuit presented to the emitter must be high or the unijunction action will be impaired.

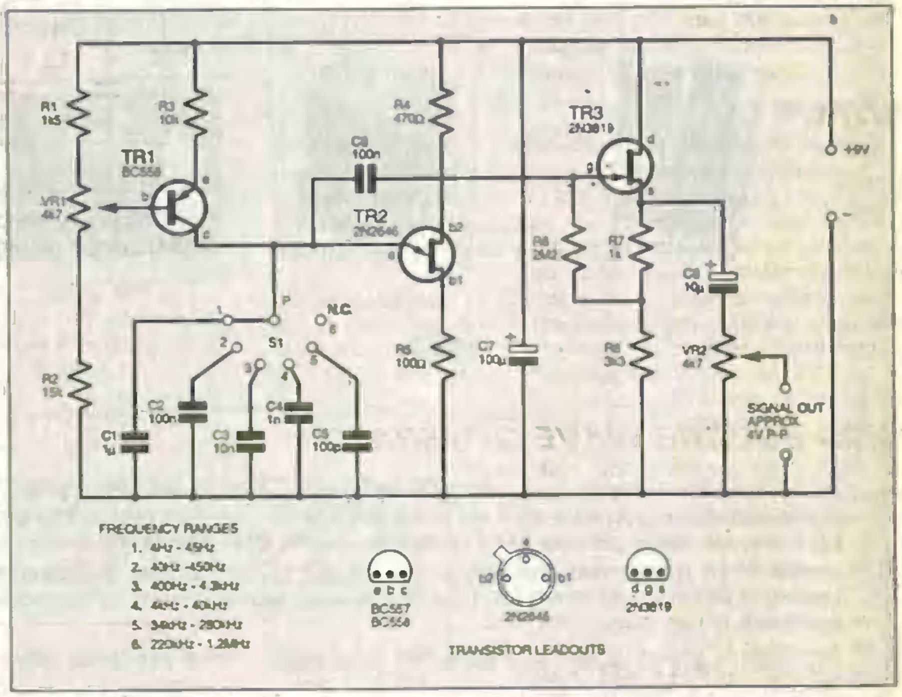

Fig.8. Circuit for a linear sawtooth generator.

The value of resistor R1 can range from 10 kilohm to one megohm (1M), and capacitor C1 from 1μF or more down to 100pF. Connecting a one megohm potentiometer in the R1 position will provide a wide frequency coverage with a single capacitor. The peak-to-peak signal output at the emitter is approximately equal to half the supply voltage.

LINEAR SAWTOOTH GENERATOR

Whilst the sheer simplicity of the circuit arrangement shown in Fig.7 makes it attractive for some applications, the high output impedance and non-linear waveform limit its usefulness.

In the circuit diagram shown in Fig.8, the timing capacitor (C1 to C5) is charged via a constant current generator stage, transistor TR1. A f.e.t. source follower buffer stage, TR3, presents a high impedance to the unijunction's emitter and a suitably low impedance to the accepting circuit. By these means, the limitations of the basic circuit are overcome.

When a capacitor is charged via a resistor, the initial voltage rise is rapid, gradually tailing off as it approaches a fully charged state. Because of this, the waveform developed across the capacitor is not linear.

In Fig.8, current flow through transistor TR1 to capacitors C1 to C5 (via switch S1) is controlled solely by the setting of VR1, and the charging rate of the timing capacitor is, therefore, constant. This results in a linear voltage rise and a more perfect sawtooth waveform.

The buffer stage, TR3, is identical to the one adopted for the sine wave generator shown in Fig.2, and its operation has already been described. Frequency of oscillation is particularly dependant upon supply voltage, and a well regulated power supply is essential for the correct operation of this circuit. Stray capacitance acts as the timing capacitor on the highest frequency range. ☐

SAWTOOTH GENERATORS

A unijunction transistor can form the basis of a very simple relaxation oscillator, and a typical circuit is given in Fig.7.

The following formula, which relates frequency to resistance and capacitance in the timing circuit (R1 and C1), produces tolerably accurate results:

$$f = \frac{800000}{RC}$$

when f is in Hertz, R is in ohms, and C is in μF. A sawtooth waveform with a peak-to-peak value equal to half the supply volts is developed across the timing capacitor.

The output of this simple, single transistor oscillator is non-linear and at a high impedance, and an improved version is given in Fig.8. This more complicated circuit generates an extremely linear sawtooth wave and has a low impedance output.

Because of the way the timing capacitor is charged, it is not possible to quote a simple formula for the calculation of frequency. The measured ranges quoted in Fig.8 should, however, form a useful guide to component values for spot-frequency versions of the circuit.