Constructional project:

Jogger Logger counts your steps

Here's a project that can save you a lot of doubtful guessing. It counts the number of steps you run while having your evening jog, and lets you work out how far you've gone.

by HENK MULDER

Ten, perhaps fifteen years ago, our society was struck by this new sport, jogging. Until then running was a branch of athletics and was based on speed. Running was also an additional training to other sports.

Suddenly however, running was renamed jogging and became very popular. Anybody who cared a bit about his (her) health jogged. Jogging was it. Politicians looking for votes would be interviewed while jogging around Capital Hill.

Jogging was also promoted by commerce. The fashion industry took the initiative and launched a whole new line of clothing. The electronics industry saw a hole in the market and strapped wild coloured walkman-type radios to the joggers. The stereotype of the jogger was born.

Today, in 1987, the novelty has worn off a bit. Only the real joggers have survived. Still, joggers are a familiar sight in our streets and parks.

Jogging is a cheap and simple way to keep fit. You can do it wherever you like. Any moment of the day is good enough, and it takes as long as you like. But just as in most sports, joggers like to compare their jogging talents to those other people, or to their own previous achievements.

The easiest way to make such comparisons is to run a known distance and to time oneself. The timing is generally not a problem, as nowadays we seem to be born with quartz watches strapped around our wrists!

It is the other parameter, distance, which seems to be more difficult. Estimating distances is for many people an impossibility. Those people who manage guessing a distance probably base their estimation on the time it took them to cover the distance, and the speed they had while doing it. The latter is based on experience as one person will mostly walk, run or cycle with a constant speed.

While having a tiresome jog one night, the author wondered whether it would be possible to measure the jog distance using electronics. A couple of miles later the Jogger Logger was conceived, in spirit at least. The actual prototype took another few miles, which just shows how healthy electronics can be!

We made just one assumption when conceiving the Jogger Logger: we assumed that the step length of a person does not vary much as time goes by.

The Jogger Logger basically counts all the steps a person takes when jogging about.

Although all the steps are counted, not all are displayed. The resolution of the Jogger Logger is ten steps. The maximum count is 9999. This covers a running range from roughly crossing the street to running two and a half marathons.

The Jogger Logger runs from a 9V battery. As the LED display is only activated when a button is pushed, it doesn't consume very much battery power at all. As a result, the Jogger Logger should run quite a few miles. Electrically speaking that is; physically we can't predict too much . . .

The circuit

Although the name wouldn't suggest it, the Jogger Logger is a typical example of a piece of measurement equipment. The circuitry of such equipment can generally be divided into five blocks. There is the transducer, interface, signal processor, output device and the power supply.

Our transducer here is a vibration sensor. When a person moves in a horizontal direction with a constant speed (also called jogging), the body of the person tends to shake and vibrate. The set of shakes in the body with all their related vibrations are doubtlessly infinitely complex. But without going too much into the physics of the human body, one might agree that every time a foot lands on the running surface, a major shake is given to the body. It is this shake we aim to measure with the Jogger Logger, hence the vibration sensor as transducer.

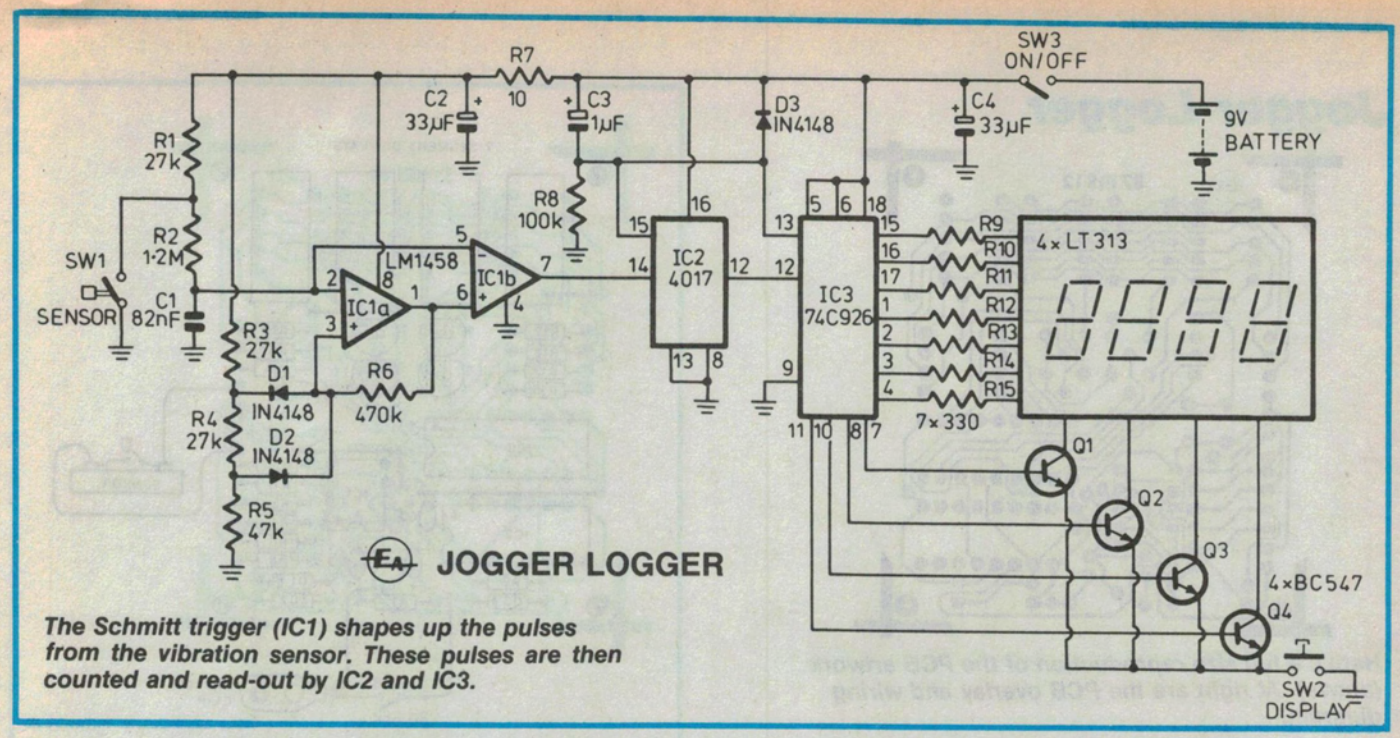

The Schmitt trigger (IC1) shapes up the pulses from the vibration sensor. These pulses are then counted and read-out by IC2 and IC3.

Ignoring the details for the moment, the signal conditioner consists of a low pass filter and a Schmitt-trigger amplifier (IC1). This block converts the switch signal from the vibration sensor into a digital signal; every step should result in a pulse at this stage. All other vibrations or noise are eliminated in this section.

The digital signal from IC1 is processed by IC2 and part of IC3. The only processing to be done is counting the steps taken by the jogger. IC2 is a decade counter and divides the number of steps taken by 10. The resulting pulses are counted by the four digit counter in IC3.

The display device consists of the multiplexer in IC3, the 7-segment displays and the transistors. This is where the number of steps are being read out.

The remaining block is the power supply. Ours consists of a battery and a two stage RC filter. This to supply a smooth voltage to the conditioner and processing blocks.

Right, now for the details. Fig.1 shows the relation between the various signals in the first stage.

The signal from the vibration sensor is filtered by R1, R2 and C1. The contacts of the switch are normally open and C1 is therefore normally charged to the 9V supply voltage. When the contacts of the switch close, this capacitor is discharged. As the contacts open again, the capacitor recharges again.

This process results in a signal as shown in the diagram. Other short vibrations (such as contact "bounce") appear as noise on the output signal of the filter.

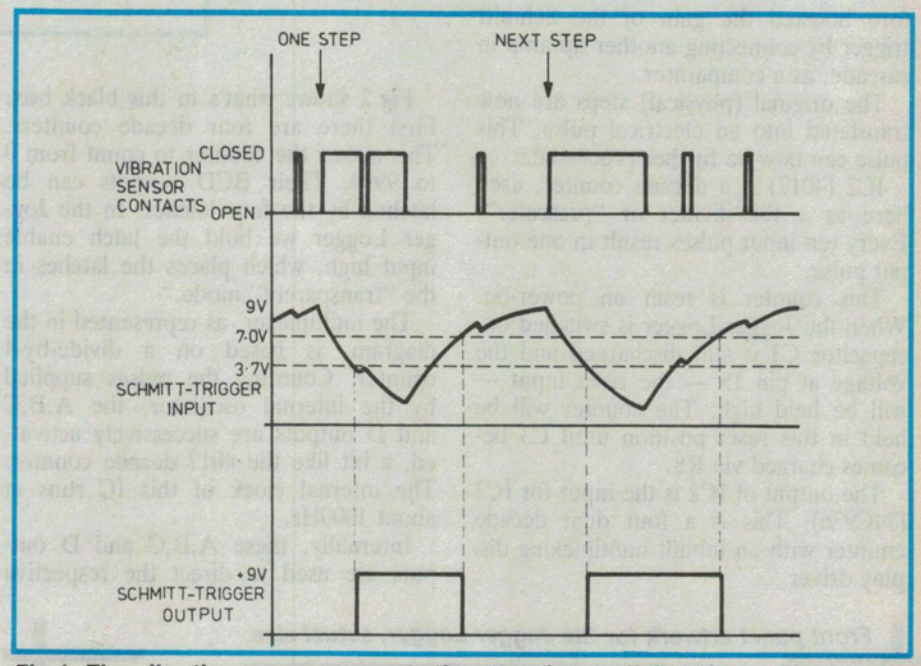

Fig.1: The vibration sensor converts the steps into a digital signal. The contact noise is filtered off and the step pulses are retrieved by the Schmitt trigger.

The Schmitt trigger amplifier cancels out this noise. How does it work? Have a look at the amplifier first. Suppose that the input voltage at the inverting input is low and the output is high. The voltage at the non-inverting input is equal to that of the voltage at the upper branch of the voltage divider R3, R4 and R5. Increased with the 0.6V of diode forward voltage drop, this is about 7.0V.

When the voltage at the inverting input exceeds this 7.0V, the output of the op amp will toggle to low. The voltage at the non-inverting input is now supplied by the lower branch of the voltage divider, minus the 0.6V diode voltage, this being 3.7V. In order to toggle the output voltage of the op amp back to high, the voltage at the inverting input has to go under the 3.7V threshold level.

The great advantage of this type of Schmitt trigger amplifier is that the trigger levels can be given any desirable value without having to fiddle with voltage biasing at either the inverting or non-inverting input.

Our prototype still showed some noise around the transitions. We there-

Jogger Logger

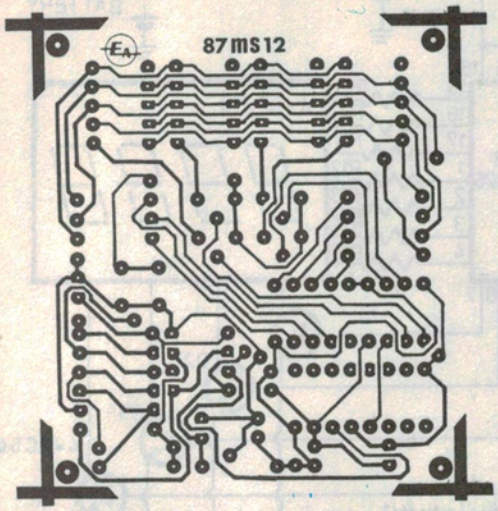

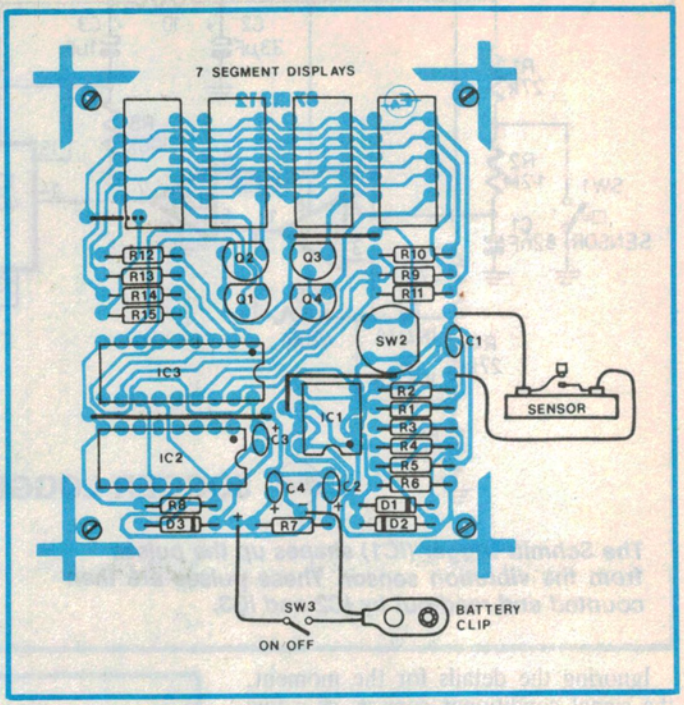

Here's a full size reproduction of the PCB artwork (above). At right are the PCB overlay and wiring diagram.

fore boosted the gain of the Schmitt trigger by connecting another op amp in cascade, as a comparator.

The original (physical) steps are now translated into an electrical pulse. This pulse can now be further processed.

IC2 (4017) is a decade counter, used here as a 10x divider or "prescaler". Every ten input pulses result in one output pulse.

This counter is reset on power-on. When the Jogger Logger is switched on, capacitor C3 is still discharged and the voltage at pin 15 — the reset input — will be held high. The counter will be held in this reset position until C3 becomes charged via R8.

The output of IC2 is the input for IC3 (74C926). This is a four digit decade counter with an inbuilt multiplexing display driver.

Fig.2 shows what's in this black box. First there are four decade counters. This allows the counter to count from 0 to 9999. Their BCD outputs can be latched by the four latches. In the Jogger Logger we hold the latch enable input high, which places the latches in the "transparent" mode.

The multiplexer, as represented in the diagram, is based on a divide-by-4 counter. Counting the pulses supplied by the internal oscillator, the A,B,C and D outputs are successively activated, a bit like the 4017 decade counter. The internal clock of this IC runs at about 1000Hz.

Internally, these A,B,C and D outputs are used to direct the respective contents of the latches to the BCD to 7-segment converter.

Back to the Jogger Logger, the 7-segment information is fed to all four displays. Using the A,B,C and D outputs of the multiplexer, the cathodes of the displays are only switched on by transistors Q1-Q4 when the 7-segment information applies to that particular display.

As you may know, this is called multiplexing: sending parallel information (4 digits) via a serial link (7-segment control lines) to retrieve the original parallel information (4 digits displayed). The advantage of course is that we only need 11 lines to control the 4 displays, rather than 32 (4 times 8).

When pushed, the display button (SW2) switches the emitters of the transistors to earth. This means that the displays can only be read when this button is pushed, saving us precious battery power as displays tend to consume a lot.

IC3 is reset by the same power-on signal as is used for IC2.

Front panel artwork for the Jogger Logger, actual size.

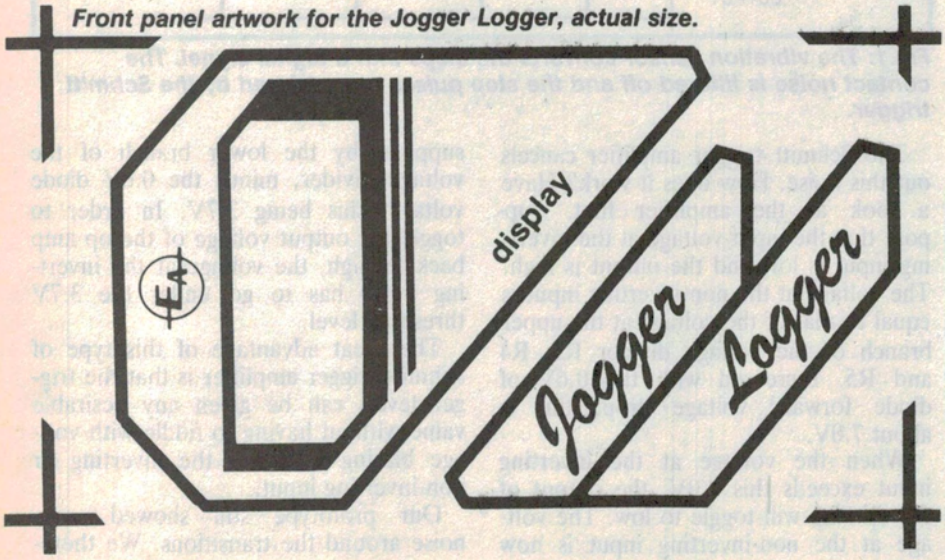

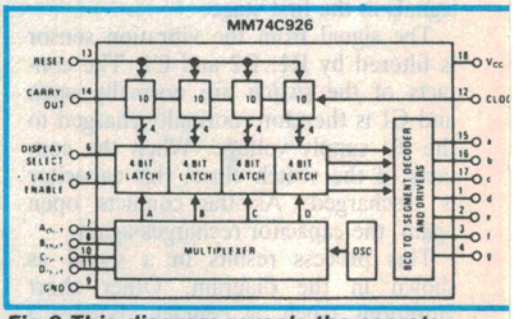

Fig.2 This diagram reveals the secrets of the 74C926, a 4-digit counter and display driver.

Capacitor C4 compensates for the increasing output resistance of an aging battery. The low pass filter R7/C2 filters off the ripples caused by the display multiplexer and supplies a smooth voltage to the signal conditioner stage.

Constructional details

The "brains" of the Jogger Logger are fitted on a printed circuit board (PCB) coded 87ms12. It measures 54 x 62mm. The PCB, battery and vibration sensor are mounted together in a small zippy box.

We managed to keep the Jogger Logger relatively small. As it has to be carried along when jogging, it can't really be small enough. You might have a case which is ideal for the job. You might even consider making a pouch of material, like a money belt. As said, we used a small zippy box, which didn't seem such a bad compromise.

Whichever case you decide to use, the electronics of Jogger Logger need to be constructed first. Looking at the PCB you will notice that there is a lot to be mounted on a small surface. Although the assembly is far from difficult, you should take a bit of extra care when soldering the components to the PCB. There are a lot of tiny tracks close to the component pads and it would fairly easy to bridge certain tracks with a drop of solder. Needless to say, this isn't a good idea.

Following the established logic you should start the construction by mounting the wire links. Note that one link "goes around the corner". Next come the resistors, the diodes, and ICs. We mounted IC3 — the dearest of the lot — in an 18 pin socket, rather than solder it in.

After the ICs you should mount the four displays, the transistors and the capacitors. Note the orientation of the ICs, transistors, diodes and the electrolytic capacitors.

The last to mount on the PCB is the push button switch. This switch should be mounted a bit off the PCB, so that it can be pushed down without it touching the resistors nearby.

Having finished the PCB assembly, you should test it before actually mounting in the project case. To do so you'll need to wire the battery clip, on/off switch and the vibration sensor to the board. The wiring diagram will provide the details.

Looking at the vibration switch, you will see that there are three connections. You should use the two connections at either side of the actual contacts. The third contact is for a tamper switch, but this we did not use.

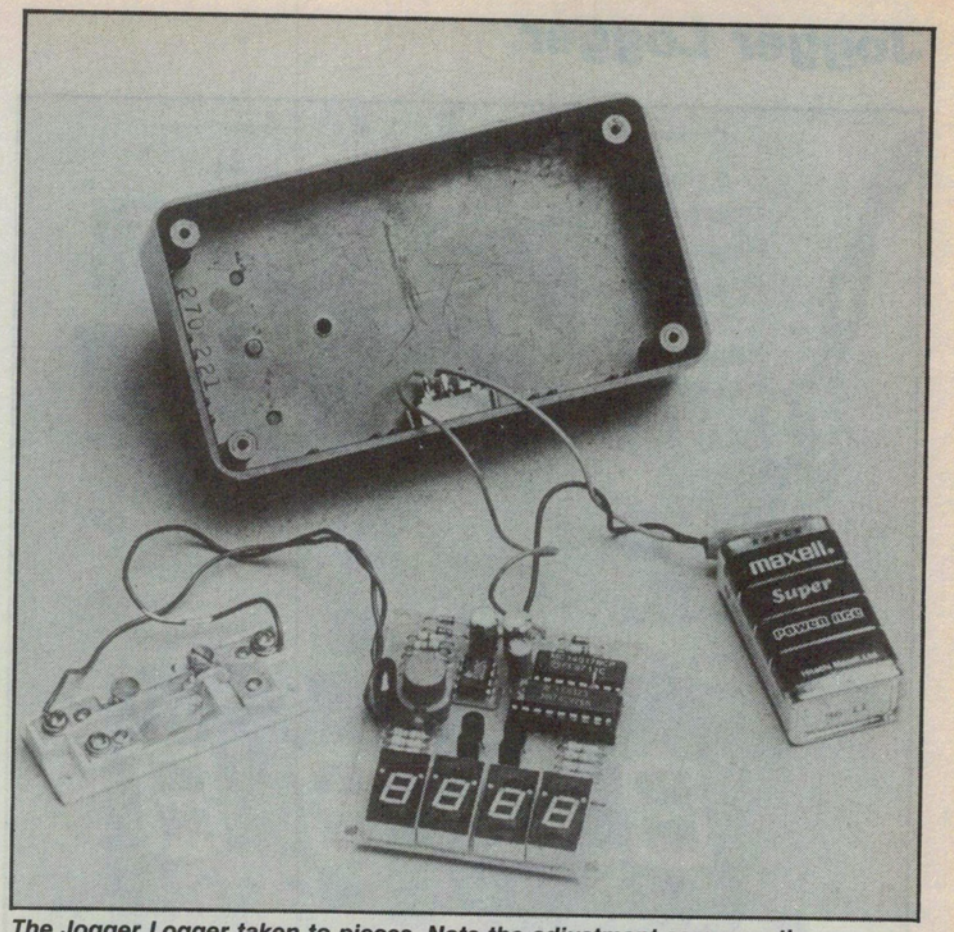

The Jogger Logger taken to pieces. Note the adjustment screw on the vibration sensor. The PCB is normally mounted to the lid with screws and spacers. The vibration switch is mounted at the upper end of the case, while the battery fits at the lower end.

Before switching on, you should inspect the PCB for accidental shorts or cut tracks. Also recheck the orientation of the components, just to make sure.

Having visually checked the Jogger Logger, you can flip the on/off switch. Push the push button on the PCB and the display should read "0000". If not, switch the unit off and check for errors.

The Jogger Logger can be checked by pushing the contacts of the vibration sensor several times. After ten times, the display should read "0001". Tiring as it may seem, it is worth tapping the sensor at least a thousand times in order to check that all the digits count properly.

Switching the Jogger Logger off and on again should reset the counter.

Having made sure that the electronics function properly, you should now build the PCB into the case. We did not use the plastic cap provided with the vibration sensor; instead we trimmed the sides, to make it fit into the case. Having cut away the last of the plastic ribs inside the case, the sensor fitted tightly between the remaining ribs and the plastic uprights (which connect to the lid).

You should drill a hole (about 5mm diameter) in the case, to provide access to the adjustment screw of the vibration sensor.

The PCB is connected to the lid using four screws, spacers and appropriate nuts. You'll need to drill holes for the push button and the four mounting screws. The latter should be counter sunk.

The hole for the display we worked out slightly larger than strictly necessary. The panel artwork as shown will then cover all the 'rough' edges. This open space should be filled with red perspex.

The panel artwork also covers the four mounting screws, so make sure that these screws are well tightened before you stick the panel artwork to the lid. We made this artwork out of aluminium Scotchcal.

Finally mount the on/off switch. Put in a battery and firmly screw the lid to the case. The Jogger Logger should now be ready for adjustment.

Jogger Logger

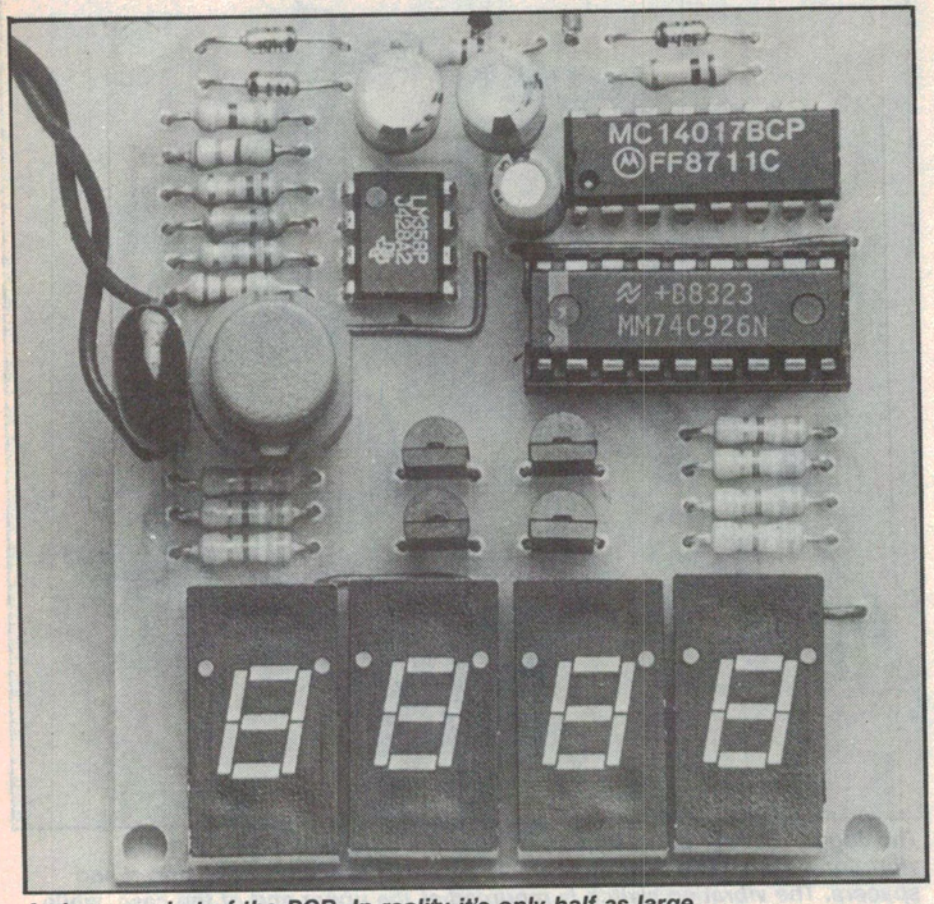

A close up shot of the PCB. In reality it's only half as large.

Preparing the test run

The only adjustable part of the Jogger Logger is the vibration sensor. The adjustment is entirely mechanical and does not involve any high-tech test equipment. The only tool needed is a screwdriver.

Initially, the adjustment screw should be set so that the gap between the sensor contacts is very small. The gap should be a bit less than 0.1mm, which is about the thickness of this page.

Before telling you how to improve this adjustment, we'll discuss the tests we have done with the Jogger Logger. This should give you a clear picture of what the Jogger Logger does, or doesn't.

Performance

Quite a few kilometres have been run with the prototype, with very satisfying results. While testing, we noted the number of step counted by the Jogger Logger and the actual number. Some of the typical results are shown in Table 1 — remember that the Jogger Logger counts in units of 10 steps.

We tested both running and walking with the Jogger Logger, as you can see. The results for running are fairly good. Only on two occasions, the number of counted steps was wrong. The reason for both is the same. When the Jogger Logger shakes more than the body does, it can either count more or less steps. This excessive shaking can occur when the Jogger Logger is carried too loosely in the pocket. As it happened, the side pocket was fairly large.

When walking with the Jogger Logger, the results are all quite different. The Jogger Logger could be used for walking but you might have to experiment a bit, both with the adjustment and the position on the body.

From the test results we can conclude, that the Jogger Logger works well, provided that it is carried the right way. We found that carrying it in the back pocket gave satisfying results. For walking, you might care to try strapping it to the ankle.

Continued on page 137

Actual Steps	Jogger Logger	Comment
300	30	Jogger Logger in back pocket, running on level surface
300	30	Still in back pocket, running uphill.
300	32	Same pocket but running downhill.
200	17	Jogger Logger in side pocket running on level surface.
200	20	Jogger Logger between shorts and stomach, running.
200	20	In back pocket again, running on a rough surface.
300	27	In back pocket but walking (not strolling).
200	11	In side pocket now, and still walking.
200	19	Jogger Logger between shorts and stomach, walking.
200	1	Strolling . . .

PARTS LIST

1 PCB coded 87ms12
1 plastic utility box 30 x 62 x 112
1 vibration sensor (as used in car burglar alarms)
1 PCB mount push button switch
1 miniature SPST switch, or similar
1 aluminium Scotchcal front panel
1 9V battery clip
1 9V battery 216 or similar

Semiconductors

4 LT313 (Z-4103) 7-segment displays 8mm
1 74C926 4-digit counter display driver
1 4017 decade counter
1 LM1458 dual opamp
4 BC547, NPN transistors
3 1N4148 diodes

Capacitors

1 1uF 16VW electrolytic (PC mount)
2 33uF 16VW electrolytic (PC mount)
1 82nF metallised polyester

Resistors (0.25W,5%)

1 x 10, 7 x 330, 3 x 27k, 1 x 47k, 1 x 100k, 1 x 470k, 1 x 1.2M

Miscellaneous

scrap piece of red perspex, glue, hookup wire, solder, screws, nuts, spacers etc.

Jogger Logger

Continued from page 66

Final adjustments

Having seen our test results, it is time to put on your running shorts and take off with your own Jogger Logger.

Switch the Jogger Logger on and run, say 200 steps. The display should now read "0020". If the display reads "0019" or "0021", then you shouldn't worry yet. Repeat the test with longer distances.

If the Jogger Logger doesn't count right then there are two possibilities. If the error is less than 50% then it is most likely that the Jogger Logger is shaking more (or less) than it should. It this case you might have to review the positioning of the Jogger Logger. Readjusting the vibration sensor might give an improvement.

If the error is quite large, then you should readjust the Jogger Logger. If the count is too low, than the gap between the sensor contacts should become smaller. If the count is too high, then the gap has to be widened. Don't turn the screw too much at a time.

If you are lucky, then the Jogger Logger will be properly adjusted at first go. In the alternative case you might have to run a few kilometres to get it right. Still, the adjustment isn't too difficult.

The Jogger Logger allows quite a range of different running styles. It is possible however that when the it is adjusted for a heavy person, it may not work properly for a light person, and vice versa.

Finally, after having adjusted the Jogger Logger, we secured the adjustment by putting a drop of cement on the thread of the screw.