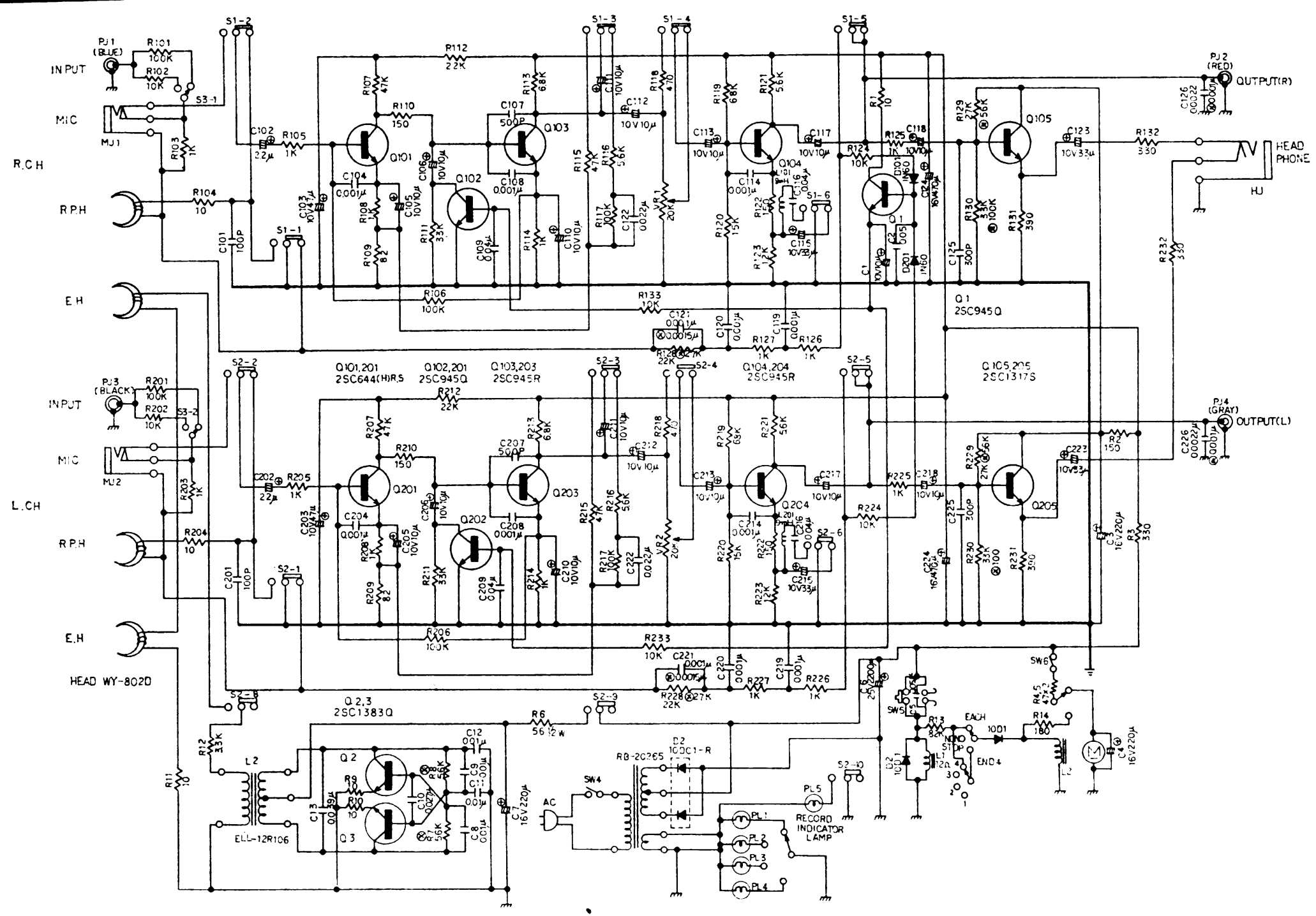
INPUT
MIC
R.CH
R.P.H
E.H
PJ1 (BLUE)
PJ2 (RED)
OUTPUT(R)
HEAD PHONE
HJ
PJ3 (BLACK)
PJ4 (GRAY)
OUTPUT(L)
L.CH
HEAD WY-802D
Q101,201 2SC644(H)R.S
Q102,201 2SC945Q
Q103,203 2SC945R
Q104,204 2SC945R
Q105,205 2SC1317S
Q1 2SC945Q
Q2,3 2SC1383Q
ELL-12R106
RB-2C265
AC
RECORD INDICATOR LAMP
EACH
STOP
END