INSTRUCTION MANUAL

EICO

667 DYNAMIC CONDUCTANCE TUBE & TRANSISTOR TESTER

EICO

131-01 39th Ave., Flushing, N. Y. 11352

MODEL 667 ADDENDUM - TRANSISTOR

(For Instruction Manual)

An improved procedure has been developed for transistor testing, which is described in the following revision of steps 5 to 8 on page 7 of the Instruction Manual. No transistor chart is provided, as it is not required when using the revised test procedure. With the great number of transistors now available, a transistor handbook would be needed, in any case, to determine the type (p-n-p or n-p-n) and basing of all the transistors to be encountered.

Revised Steps 5 to 8, Page 7 of the INSTRUCTION MANUAL:

5. Refer to a transistor handbook for the type (p-n-p or n-p-n) and basing of the transistor to be tested. Note that only signal transistors can be tested with the instrument and the criteria described below apply only to signal transistors (not power transistors).

6. Insert the emitter (E), base (B), and collector (C) lead of the transistor in the corresponding terminals of the transistor socket located immediately above the TRANSISTOR TEST selector.

7. Turn the TRANSISTOR TEST selector from "TUBE" to position 1 (first position away from "TUBE") on the p-n-p or n-p-n side depending on the type of transistor under test. The indication on the meter will be proportional to the collector current with emitter grounded and no base signal. On this test, transistors in good condition should preferably read in the "Ico GOOD" area between 0 and 40 on the 0 to 140 meter scale, but are acceptable with readings up to 80 on this scale. Reject transistor that reads above 80 on this test.

8. Turn the TRANSISTOR TEST selector to position 2 (second position away from "TUBE"), and read the DC Beta (ratio of collector current to base current). The minimum acceptable DC Beta reading depends on the Ico reading obtained in step 7. The higher the Ico reading (up to the maximum acceptable limit of 80), the higher the minimum acceptable DC Beta reading is, in direct proportion. Numerically, the minimum acceptable DC Beta reading is slightly more than 60% of the Ico reading on the 0 to 140 meter scale. Examples: If the Ico scale reading is 80, the minimum acceptable DC Beta reading is 50; if the Ico scale reading is 40, the minimum acceptable DC Beta reading is 25.

Page 9 of the INSTRUCTION MANUAL:

Delete the following material from the text:

"In some cases, the range of Beta given in the chart has been taken directly from the transistor manufacturer's specification; in other cases Beta has been calculated from the grounded base Alpha, Alpha ce, according to the relationship:

$$\text{Beta} = \frac{\text{Alpha ce}}{1-\text{Alpha ce}}$$ "

Revise the remaining text as follows:

"These simple tests, when related to each other as described in the test procedure, will determine if the transistor is good or bad. They do not, of course, duplicate the factory tests of frequency response, input resistance, output resistance, collector capacitance, and other electrical characteristics that are necessary for a specific grade of transistor."

Page 12 of the Instruction Manual:

In Figure n) TRANSISTOR TEST 1, add a shunt resistor R5 across meter M1.

In Figure o) TRANSISTOR TEST 2, add a shunt resistor R6 across meter M1.

GENERAL DESCRIPTION

The EICO Model 667 Dynamic Conductance Tube & Transistor Tester is one of the first thoroughly practical service instruments able to test both tubes and transistors. Among its advantages are rapid and simple operation, close simulation of actual tube operating conditions, and unexcelled thoroughness and accuracy of test. The outstanding mechanical design and layout, coupled with components carefully selected for ruggedness, makes the Model 667 extremely well-suited for the hard usage of daily service work.

All components of the Model 667 tube tester are assembled to the heavy-gauge aluminum front panel, which is in turn top-mounted by 14 screws to flanges on all four sides of the steel case. A detachable steel cover is mounted to the back of the case with separable hinges so that the cover may easily be removed for use of the instrument as a counter-top model or replaced to convert it back to a portable instrument.

There are ten different tube sockets on the panel to accomodate modern receiving and other tube types (see Types Tested below). In addition, pilot and Christmas tree lamps can be checked rapidly using the center of the Novar socket. A special transistor socket accomodates both n-p-n and p-n-p transistors. To protect against damage due to current overload, a type 3AG 1 ampere fuse is connected in series with the primary of the power transformer.

SPECIFICATIONS

LINE VOLTAGE & FREQUENCY: 105-130V, 60 cycles. Note: Do not connect to a dc line.

POWER CONSUMPTION: 10 watts with no tube/transistor under test; 50 watts at maximum load.

TYPES TESTED: 5 & 7 pin Nuvistors; Novars; Compactrons; 7, 9, & 10 pin miniatures; 5, 6 & 7 pin sub-miniatures (in-line base); 8-pin sub-miniatures (circular base); octal; loctal. In addition to receiving types, both domestic and foreign, many small transmitting and special-purpose tubes, voltage regulators, cold cathode rectifiers, electron-ray indicators, and ballast tubes are tested. Tests n-p-n and p-n-p transistors. Pilot lamps are tested in center of Novar socket. Accessory Model CRU adaptor for testing all color and black and white picture tubes.

TUBE TESTS: a) Direct-reading of inter-element and cathode heater leakage in ohms on a 0 to 20 megohms scale. DC test voltage always applied in correct polarity to eliminate emission effects from reading. b) Merit test, which is an emission reading for diodes and rectifiers and a dynamic conductance (combined plate conductance, mutual conductance, and emission) reading for triodes, tetrodes, and pentrodes.

TRANSISTOR TESTS: N-p-n and p-n-p types.

TRANSISTOR TESTS: a) Leakage measurement of collector current with emitter grounded and no base signal. b) Direct reading of current amplification factor or Beta (change in collector current caused by change in base current.

ACCURACY OF LINE VOLTAGE INDICATION: ±3%

SIZE: 12" x 15" x 6"

WEIGHT: 20 lbs.

FUNCTIONS OF CONTROLS

A necessary supplement to the operating instructions is the following description of control functions. Several controls, for example, have unusual secondary functions which must be understood in making settings.

FILAMENT SELECTOR – The dial of this control indicates rms a-c volts tapped from the power transformer and applied to the tube filament at each position. Do not take the setting for granted; check the roll chart and set it to the value shown for the particular tube type. The last position, marked "Z", is used when checking cold cathode tubes such as the OZ4 for which the plate voltage of the Model 667 is insufficient to initiate conduction in the tube. The 117 volts available from the FILAMENT switch is thrown in series with the plate voltage of 180 volts at the "Z" position to provide a total voltage sufficient to initiate tube conduction. A 3K resistor, placed in series with this circuit, provides current limiting to protect the tube after the start of conduction.

LINE ADJ. – This control is a continuously variable potentiometer connected across a portion of the primary winding. It permits adjustment of transformer secondary voltages to the standard test values despite line voltage and filament load variations. The LINE push-button serves to insert a standard resistance in the leakage test circuit which will result in exactly half-scale deflection (LINE mark) when the LINE ADJ. control has been set properly in relation to the actual line voltage and filament load. The actual line voltage may be read off the dial of the LINE ADJ. control with an accuracy of ±3% when line adjustment is made under no-load conditions (no tube inserted for testing).

GRID control – A continuously variable potentiometer which taps the desired grid voltage up to a maximum of 5, 15, or 45 volts, depending on the setting of the V lever. A snap switch, which takes up the first few divisions on the dial, is actuated in the most counter-clockwise position and inserts a 400Ω current-limiting resistor in series with the plate supply (for high-current rectifiers). At settings of 7 and above, the resistor is shorted.

PLATE control – A continuously variable rheostat in series with the meter which acts as a "fine" adjustment of meter sensitivity in conjunction with the "coarse" adjustment provided by the "S" lever switch.

LEVER switches 1 through 12 & C – These are single section six-position switches which connect the similarly numbered tube socket terminals (lever C is for the cap lead) to the proper voltage sources for the tube which is to be tested. At the 1 position, each switch contacts ground; at the 2 position, each switch contacts the filament voltage; at the 3 position, each switch contacts the screen voltage; at the 4 position, each switch contacts plate voltage; in the 5 position, each switch contacts grid voltage; in the 6 position, each switch furnishes an open circuit.

LEVER V - This is a three section switch with four positions (1 through 4). 5, 15, 45, 90 and 180 volt taps on a separate secondary winding on the transformer are so connected to these switch sections as to provide selection from four combinations of plate, screen, and grid voltages. The plate and screen voltages selected are applied through the MERIT switch to the corresponding position contacts on lever switches 1 through C. The grid voltage selected is applied to the GRID potentiometer so that the desired portion of the total available voltage can be accurately tapped off by means of the dial calibration and applied to the grid position contacts on lever switches 1 through C, also through the MERIT switch. The plate screen, and grid voltages selected at each position of the V switch are as follows:

POSITION	PLATE	SCREEN	GRID
1	45V	15V	0-5V
2	90	45	0-15
3	180	90	0-15
4	180	90	0-45

LEVER S -- This is a single section six-position switch which selects the value of shunt resistance placed across the meter and PLATE control potentiometer. As such, lever S is a "coarse" meter sensitivity control which is used in conjunction with the "fine" control provided by the PLATE potentiometer. Position 1 provides the least meter sensitivity for high current tubes and position 5 the highest sensitivity for low current tubes; intermediate positions provide a variety of sensitivities necessary for testing the many tube types encountered. At position 6 of the S switch, the grid voltage from the V switch is connected through the 24,000 ohm current-limiting resistor in testing light-duty diodes.

PUSH-SWITCHES 1 through 12 & C -- Each of these switches serves as a transfer switch for the tube element connected to the corresponding base pin number. The No. 1 switch controls all connections to the No. 1 socket terminals; the No. 2 switch controls all connections to the No. 2 socket terminals; and so forth, in order, through to the No. 12 switch for the No. 12 terminal of the COMPACTRON socket. The C switch controls the connections to the cap lead. These push switches serve the following functions:

With the MERIT and LINE switches at their normal position, depressing one of these switches transfers the corresponding tube element to one side of the ohmmeter circuit (with the remaining tube elements all grounded together with the other side of the ohmmeter circuit) as required for the inter-element leakage tests. These push-switches are also primarily responsible for two of the outstanding features of this tube tester; one feature being that in the majority of cases all sections of multi-section tubes draw their normal current when any one section is tested; the second being the rapid testing afforded multi-section tubes due to the saving in set-up time. These advantages are obtained because the push switches permit selection of the tube base pin which will be connected to the transformer power supply through the meter circuit when the MERIT switch is pulled down, in order that the current through the corresponding tube element (normally the plate of a tube or a tube section) be measured for MERIT testing. The remaining tube base pins (connected to the push switches which are not depressed for the particular MERIT test) are connected either directly to the transformer power supply or indirectly through a potentiometer.

RESET push button -- This button is a convenience intended to permit restoring of a depressed push-switch to the normal position.

H-K LEAKage push switch -- This is a momentary switch which is used for heater-cathode leakage testing. When the push switch for an indirectly heated cathode (underlined in the LEAK column of the roll chart) is depressed to transfer the cathode to one side of the ohmmeter circuit, the H-K LEAK button is depressed also to break the ground connection of the remaining "lumped" elements in order that cathode emission current to these elements will be excluded from the cathode heater leakage measurement.

TRANSISTOR TEST selector -- This is a special five-position multi-circuit switch performing the following functions: a) At the TUBE position the transistor test socket is de-energized and the meter connected so as to render it available for line adjustment, leakage testing, and merit testing; b) At the transistor test positions, it applied a dc bias voltage between the collector and emitter socket terminals, of polarity depending on whether the n-p-n or p-n-p positions are used.

At the 1 position for either transistor type, the meter is inserted in the collector circuit in series with a 1K current-limiting resistor to measure the current (I_{ceo}) under these conditions. At either 2 position, a 200K resistor is connected between the collector side of the power supply and the base to put a small current into the base. The current gain, Beta, is then read on the meter, which remains in the collector circuit.

WARNING: Be certain as to the type of transistor (n-p-n or p-n-p) you are testing. Testing a transistor using the positions designated for the opposite type may damage the tester meter or the transistor. Note that shorted transistors may cause the meter to read past full scale at the "N-P-N 1" or "P-N-P 1". Should this occur, turn the switch back to the "TUBE" position immediately and discard the defective transistor, after you have first checked to see that the correct test position was used for the particular type.

SPECIAL SOCKET CONNECTIONS -- Several socket terminal connections are not standard and should be noted. The pilot light socket in the center of the NOVAR socket is connected across the selected filament voltage (shell to ground, center post to filament switch arm). The center of the loctal socket is connected to ground. The sub-miniature in-line socket has no numbers assigned to its seven terminals. In the Model 667, these terminals are connected to the push-switches as if they were numbered 1 to 7 beginning at the index dot on the panel. However, a consistent connection procedure has been established (the roll chart settings are given accordingly), which is as follows: With tube base and socket indexes matched (dot or spur on tube base to dot at right of socket on the panel), the tube leads are inserted in order so as not to skip any socket terminals starting from the extreme right.

OPERATING INSTRUCTIONS

PRELIMINARY STEPS FOR TUBE OR TRANSISTOR TESTING

1. Insert the power plug in a 105-130 volts AC, 60 cps line outlet. Do not use a DC line outlet or any AC line outlet other than specified above.

2. Turn the tester on by rotating the LINE ADJ. control clockwise from AC-OFF.

3. Set the TRANSISTOR TEST selector to TUBE, regardless of whether it is a tube or transistor that is to be tested.

4. Make a preliminary line adjust by holding down the LINE button while turning the LINE ADJ. control until the meter pointer is over the LINE ADJ. mark on the meter (center scale). Release the LINE button at the conclusion of the adjustment.

TUBE TESTING CONTINUED

5. Press the RESET button to release any button which may be down from a previous setting. Make sure the TRANSISTOR TEST selector is set at "TUBE".

6. Move all 15 lever switches down to the "1" position.

7. Rotate one or both roll chart wheels until the tube type you wish to test appears in one of the windows. Obsolete types will be found in a supplement to this manual.

8. Note the number of lines of settings devoted to the tube in the chart. Each line of settings corresponds to a section of the tube (1 line for a single diode, triode or pentode; 2 lines for a double diode, triode or pentagrid converter; 3 lines for a duodide-triode, etc.) Each section of the tube is tested by making the settings indicated on a single line of the chart and then depressing the MERIT lever. Note, however, that twin or triple section tubes having identical tube characteristics will occupy one line with two or three plate numbers in the merit column instead of the usual single number. Each of these numbers signifies an individual merit test. Using the same line of settings, perform each individual merit test.

EXAMPLE: 12AT7, twin triode

In the merit column you will find the entry 16 (one, six). Press 1 to read merit of the first triode. Press 6 to read merit of the second triode.

All interelement leakage testing must be performed before any of the Merit tests, as a safeguard to the tube tester. The push-button which must be pressed down to complete the leakage and short testing are all given in the same line or different lines for different sections of the tube. Specific instructions for making settings and performing the required tests follow.

9. The first 3 settings following the tube type are for the FIL. selector, GRID control and PLATE control, in that order. Set these controls accordingly.

10. The next 15 settings are for lever switches 1, 2, 3, 4, 5, 6, 7, 8, 9, 10, 11, 12, C, V and S in that order. Set these levers accordingly.

11. Check all settings to make sure that no mistake has been made.

12. Insert the tube into the socket which matches its base. (The socket just above the TRANSISTOR TEST selector is for transistors only. All other sockets are for tubes only). If the rectangular sub-miniature socket is used, turn the tube so that its index (red dot, black dot, glass spur) matches the dot on the panel; then insert each lead into a socket terminal in order, not skipping any socket terminals starting from the right. If there is a top cap on the tube, connect it with the cap clip lead.

13. Allow sufficient warm-up time before proceeding. For battery-operated tubes and h. v. rectifiers (1B3 type) warm up is almost instantaneous; for most receiving tubes 10 to 20 seconds; for high power pentodes, triodes, and rectifiers 20-40 seconds. Note that the MERIT test (step 17) should not be performed until the stated warm-up time has elapsed.

14. Press the LINE button and note the meter reading. Depending on the filament drain of the tube under test, the meter will read more or less to the left of the LINE ADJ. mark (center scale). Holding the LINE button down turn the LINE ADJ. control until the meter pointer is again over the LINE ADJ. mark. Release the LINE button at the conclusion of this adjustment.

15. Refer to the first (or only) line of settings for the tube and note the buttons listed in the LEAK column. Press down each of the buttons listed one at a time (in order), observing the meter each time. (See next paragraph for evaluation of leakage readings.) The underlined leakage buttons are for indirectly heated cathodes; when these buttons are depressed, the resulting meter reading will be valid only when the H-K LEAK button is also depressed. Failure to do so will not normally cause damage to the tube, but will give too low a leakage resistance reading due to emission to other elements. Thus, the underlined leakage tests are of heater to cathode leakage only.

On cathode leakage test of light duty diodes in multi-section tubes, meter will not swing across the scale as for other type of tubes if tube under test is good, and there is no need to depress the H-K LEAK button. Underlining of pin No. 2 in case of 6AQ7 merely indicates cathode. The above also applies to other tubes of similar types such as 6R8, 6S8, and 6T8.

Standard for acceptance of rejection on Inter-Element Leakage (excluding cathode-heater leakage): No less than 5 megs on any test. A stricter standard for high reliability applications would be no less than 10 megs on any test.

Standard for Acceptance or Rejection on Cathode-Heater Leakage: Not less than 1 meg for non-power types; not less than 500K for power types. Half these values may be acceptable for tubes approaching end of life, with the exception of tubes used in audio preamplifiers which may not read less than 1 meg at any time.

In general, tubes failing to meet these standards should be discarded. In any case, do not perform a MERIT test on any tube having an inter-element leakage resistance less than 100K ohms, as this may damage the tube tester. Note that all required inter-element and cathode-heater leakage tests for the entire tube have been completed with the tester set up for the first (or only) MERIT test and before the first (or only) MERIT test is made. No further leakage testing is performed thereafter.

Note: Depressing the buttons listed in the MERIT column actually tests that element for leakage until the MERIT lever is depressed. A tube giving too low an ohms reading in this condition should not be tested for MERIT.

16. Perform the first (or only) MERIT test on tubes which have been found satisfactory as to leakage and shorts by first pressing down the button listed in the MERIT column and then pulling down the MERIT lever switch. With the MERIT lever held down, read the merit (quality) indication on the DIODES GOOD scale for diodes and rectifiers, or the colored areas and percent markings for all other tubes. Note that although 100% represents normal conductance for a new tube, some tubes will read higher and some lower because of the tolerances allowed in tube manufacturing. Note also that the limits of the GOOD, ? (doubtful), and REPLACE areas are obtained by striking an average for all tube types and so should not be interpreted in an absolute manner.

17. If there is more than one line of settings for the tube, leave the tube in the socket and proceed as follows for each line: a) Reset the lever switches and GRID and PLATE controls accordingly; b) Depress the button listed in the MERIT column; c) Pull down the MERIT lever switch to read the quality on the meter of the particular tube section under test.

18. After testing the last section of a tube, remove the tube from the socket of the tube tester. Push reset button and return all lever switches to "1". Failure to do this can result in damage to the meter when you proceed to test the next tube.

19. Proceed with testing another tube by beginning with Step 5. If there are no more tubes or transistors to be tested, turn the LINE ADJ. control counter-clockwise to its AC-OFF position. A slide switch at the end of the potentiometer winding opens the primary circuit of the power transformer and turns the tester off. If there is a transistor to be tested, proceed directly to step 5 of TRANSISTOR TESTING after completing step 18 of TUBE TESTING.

CONTINUE PROCEDURE FOR TRANSISTOR TESTING (From Step 4, Page 4)

5. Locate the type number of the transistor to be tested on the transistor chart. Note whether the transistor is a n-p-n or p-n-p type and the specified allowable range of Beta. Make sure that the TRANSISTOR TEST selector is set at "TUBE".

6. Insert the emitter (E), base (B), and collector (C) lead of the transistor in the corresponding terminals of the transistor socket located immediately above the TRANSISTOR TEST selector.

7. Turn the TRANSISTOR TEST selector from "TUBE" to position 1 on the p-n-p or n-p-n side depending on the type of transistor under test. The indication on the meter will be proportional to the collector current with emitter grounded and no base signal. On this test, transistors in good condition should read in the "I_{ceo} GOOD" area (between 0 and 40 on the 0 to 140 scale). Reject transistors that read outside the "I_{ceo} GOOD" area (higher than 40 on the 0 to 140 scale), unless note has been made on the chart that a higher reading is acceptable.

8. Turn the TRANSISTOR TEST selector to position 2 and read the current amplification factor or Beta (change in collector current caused by a change in base current) on the 0 to 140 Beta Scale. A good transistor will read within the allowable range of Beta as given on the chart for the particular transistor type. Transistors which do not give a reading within the specified allowable range of Beta may still be useable; see data sheet.

9. Turn the TRANSISTOR TEST selector back to "TUBE" and then remove the transistor from the transistor socket.

10. Proceed with testing another transistor by beginning with step 5. If there are no more transistors or tubes to be tested, turn the tester off by turning the LINE ADJ. control to its AC-OFF position. If there is a tube to be tested, proceed directly to step 5 of TUBE TESTING after completing step 9 of TRANSISTOR TESTING.

NOTE: The only controls having any effect in transistor testing are the TRANSISTOR TEST selector, the LINE ADJ. control, and the LINE push-button. Provided that a tube has not been left inserted in any of the tube sockets, the settings of any other lever switches, push-buttons or potentiometers on the panel have no effect and are immaterial.

CIRCUIT DESCRIPTION

It may be of assistance in understanding the functioning of the instrument to examine the following typical partial schematics, each of which indicates the voltages applied and the placement of the meter circuit when performing the tests provided (in accordance with the detailed operating instructions) for tubes and transistors.

NOTE: Rs denotes the meter shunt resistance selected by S29 (Lever S). Φ 1, Φ 2, and Φ 3 denote various a-c voltages taken from taps on the high voltage secondary winding of the power transformer and selected by S28 (Lever V). An asterisk denotes the function of current-limiting.

The functioning of the Model 667 in each of the various tests furnished is as follows:

INTER-ELEMENT LEAKAGE: A filtered dc test voltage of -70 volts is obtained by rectifying and filtering (CR1 and C1) the 50 volts ac obtained from filament winding tap. This voltage is applied between the tube element isolated by its transfer switch and the remaining tube elements whose lever switches are set at the plate, screen, and grid voltage busses which are grounded through the MERIT and H-K switches at their normal positions. The current through this circuit is read in ohms on the meter. Note that the polarity of the test voltage is evidently such as to eliminate cathode emission from the reading and that resistor R8 and LEAK CAL. rheostat R7 restrict the total current to 200ua (full scale) even with a dead short. For heater-to-cathode leakage testing, the connection of the "remaining" elements to ground is broken by depressing the H-K push-switch to remove them from the circuit and leave in the test circuit the cathode and heater only. This is necessary because the cathode is placed at a negative voltage with respect to the "remaining" elements when it is selected by its transfer switch and the consequent cathode emission current would also register on the meter to give a false low reading of cathode-heater leakage resistance.

LINE ADJ: For the adjustment, resistor R19 and LINE CAL rheostat R18 (identical to R8 and R7 respectively) are inserted in the leakage test circuit by depressing the LINE push-switch to exactly double the total resistance in the circuit and reduce the meter indication to exactly half scale. The condition for full-scale and half-scale reading, set in initial calibration with the LEAK CAL. and LINE CAL. rheostat R7 and R18, is that the LINE ADJUST potentiometer be set to give 130 volts across the full transformer primary (or 105 volts across the low end of the primary and the primary tap). The LINE ADJUST potentiometer permits duplication of this condition over a ±10% variation of the actual line voltage from the nominal value (117 volts).

MERIT TEST: Several of the many configurations that occur in MERIT testing are shown above. In general, each test furnish a composite indication of cathode emission capability and the ability of each grid to control the plate current in accordance with the design of the tube, plus the ability of the plate to receive the regulated current. For diodes and rectifiers, the measurement is simply an emission test. To properly test a great variety of tube types, several plate, screen and ranges of grid voltage are available from taps on the plate secondary winding of the transformer for selection by switch S28 (lever V). These voltages are applied through switch S34 (MERIT) to the plate, screen, and grid bus bars inter-connecting corresponding terminals on switches S15 through S27 (lever switches 1 through 12 & C). The grid voltage is variable by R16 (GRID potentiometer) from zero to maximum of the range selected. Note that the plate, screen, and grid voltage contacts on switches S15 through 27 are grounded at the normal position of S34 and that plate screen, and grid voltages are only applied when S34 is pulled down.

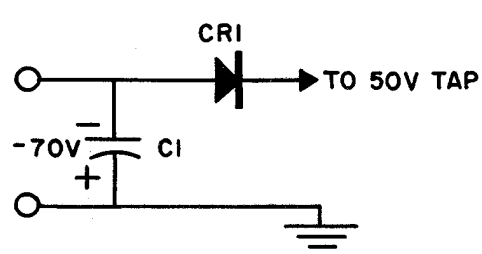

LEAKAGE TEST POWER SUPPLY — Also used for Line Adjust

TRANSISTOR TESTS: At the P-N-P 1 or N-P-N 1 test positions of the TRANSISTOR TEST selector, a measurement is made of the collector current that flows when the emitter is grounded and no signal is applied to the base. This current is a function of the temperature, the resistivity of the germanium and, most important, becomes quite large if there is contamination of the surface of the germanium or if the transistor has been damaged by a short circuit. At the P-N-P 2 or N-P-N 2 position, a small current is put into the base via the 200KΩ resistor R3 to permit measurement of the collector-to-base amplification factor Beta, sometimes called Alpha cb. In some cases the range of Beta given in the chart has been taken directly from the transistor manufacturer's specification; in other cases Beta has been calculated from the grounded-base Alpha, Alpha ce, according to the relationship.

$$\text{Beta} = \frac{\text{Alpha ce}}{1 - \text{Alpha ce}}$$

These simple tests will determine if the transistor is good or bad, but will not, of course, duplicate the factory tests of frequency response, input resistance, output resistance, collector capacitance and other electrical characteristics that are necessary for a specific grade of transistor.

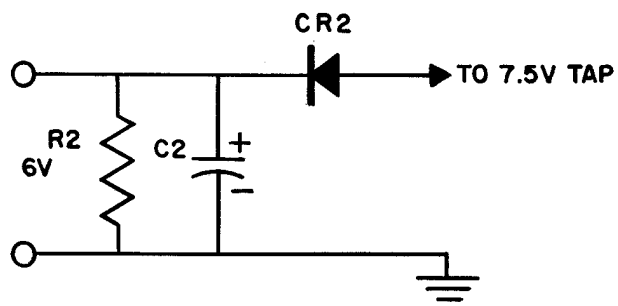

TRANSISTOR TEST POWER SUPPLY

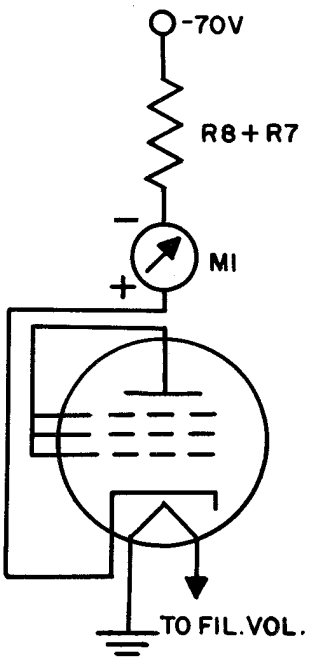

a) CATHODE-TO-HEATER LEAKAGE TEST

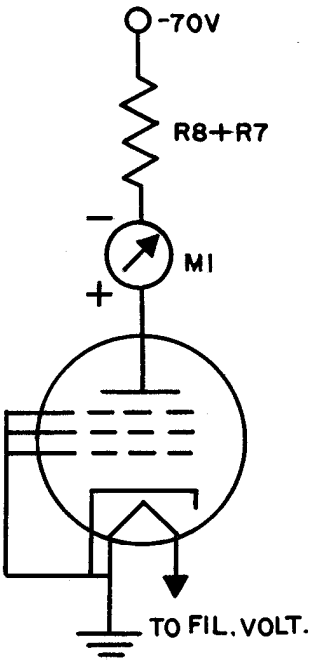

b) PLATE-TO-ALL LEAKAGE TEST

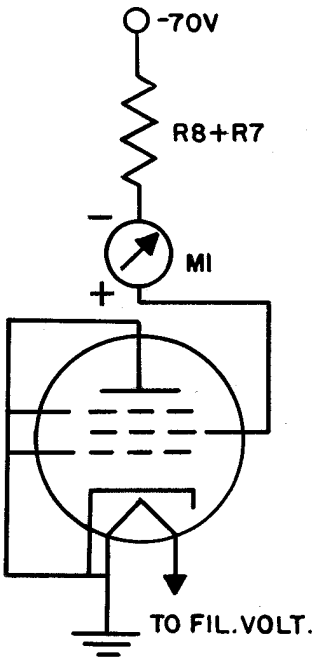

c) SCREEN-TO-ALL LEAKAGE TEST

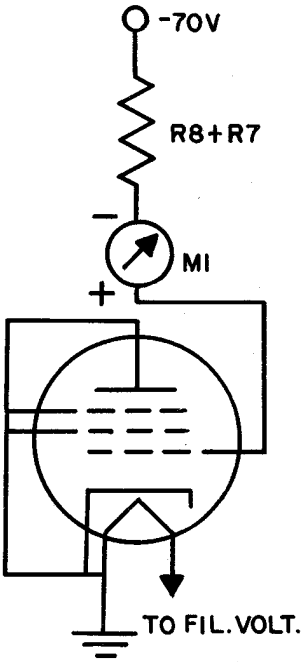

d) GRID-TO-ALL LEAKAGE TEST

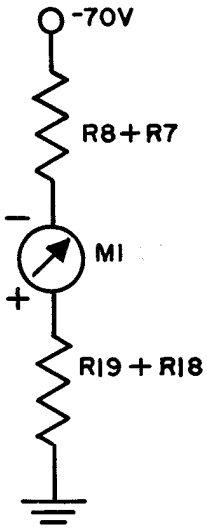

e) LINE ADJUST

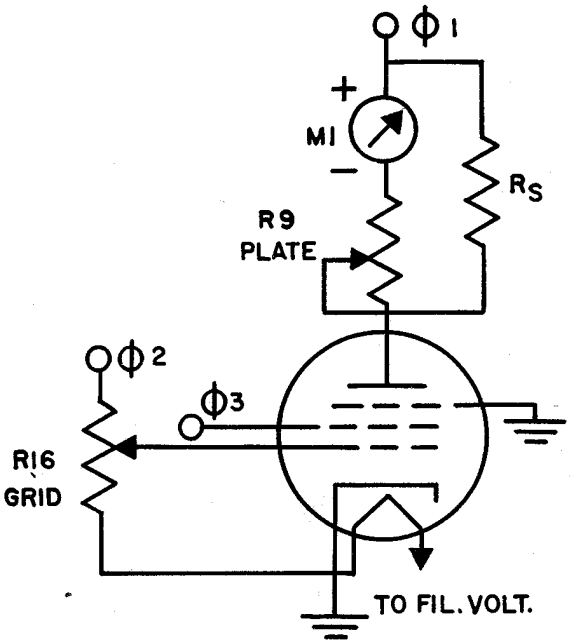

f) MERIT TEST OF TYPICAL PENTODE

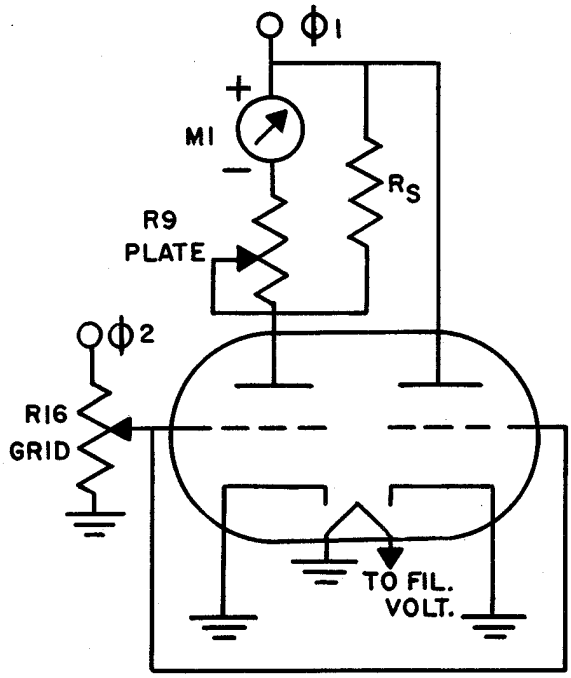

g) MERIT TEST OF TRIODE 1 of a DUO-TRIODE

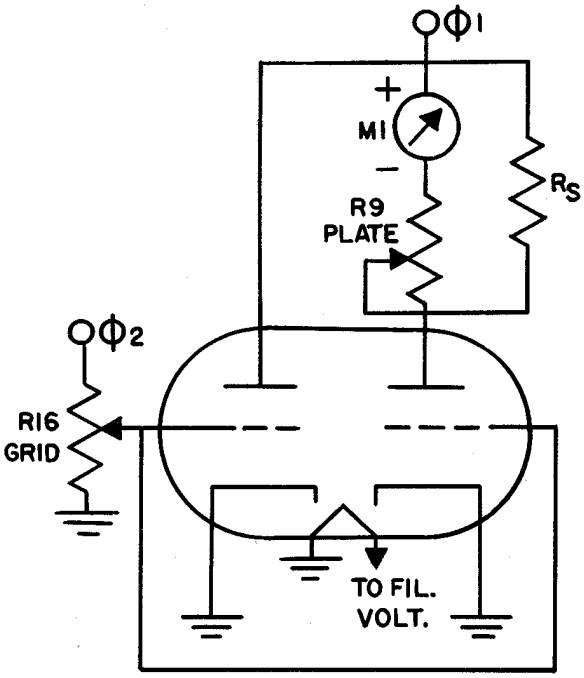

h) MERIT TEST OF TRIODE 2 of a DUO-TRIODE

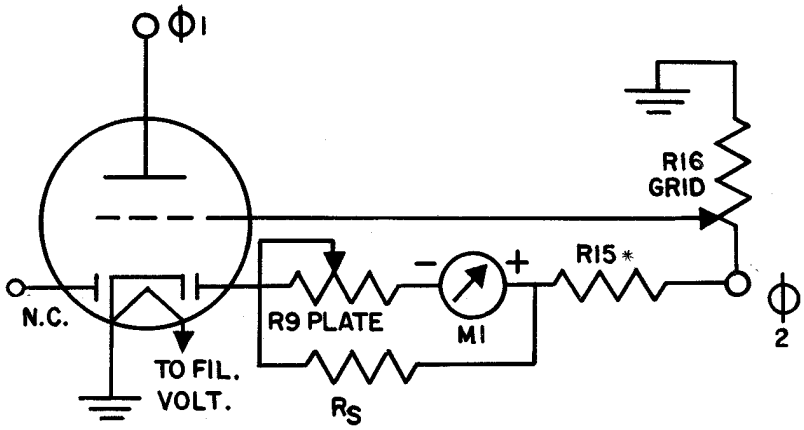

i) MERIT TEST of light-duty diodes, (showing one diode section of a triode duo-diode, such as a 12SQ7).

j) MERIT TESTING of OZ4, OY4 cold-cathode gas rectifiers (test of one section of OZ4 shown).

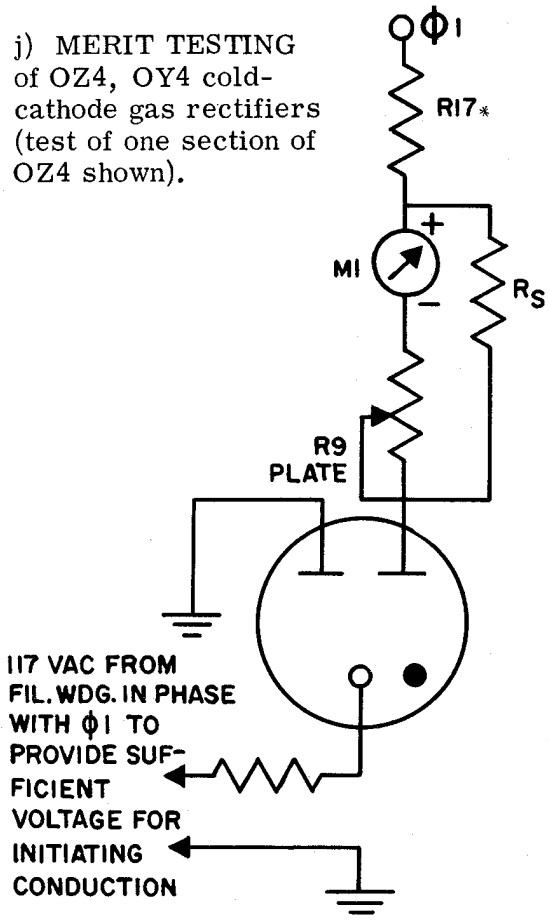

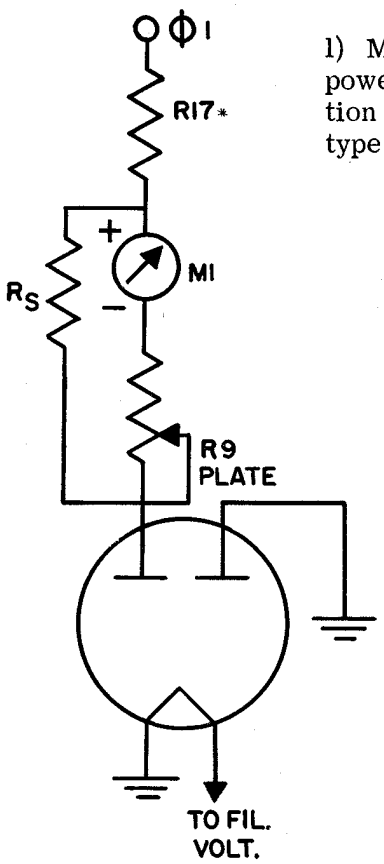

l) MERIT TEST for power rectifier section B of full-wave type.

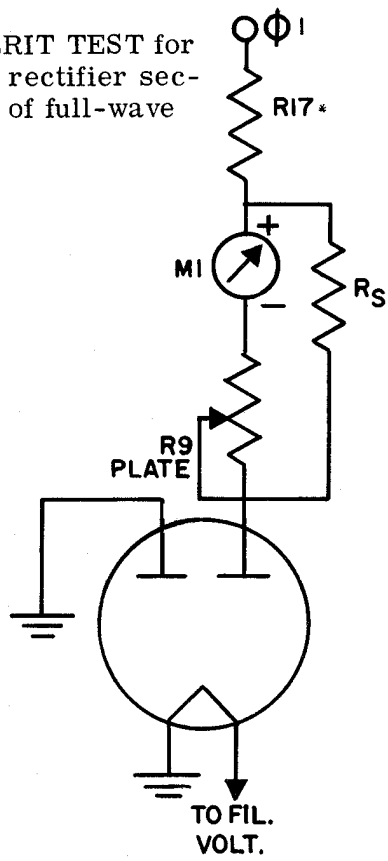

k) MERIT TEST for power rectifier section A of full-wave type.

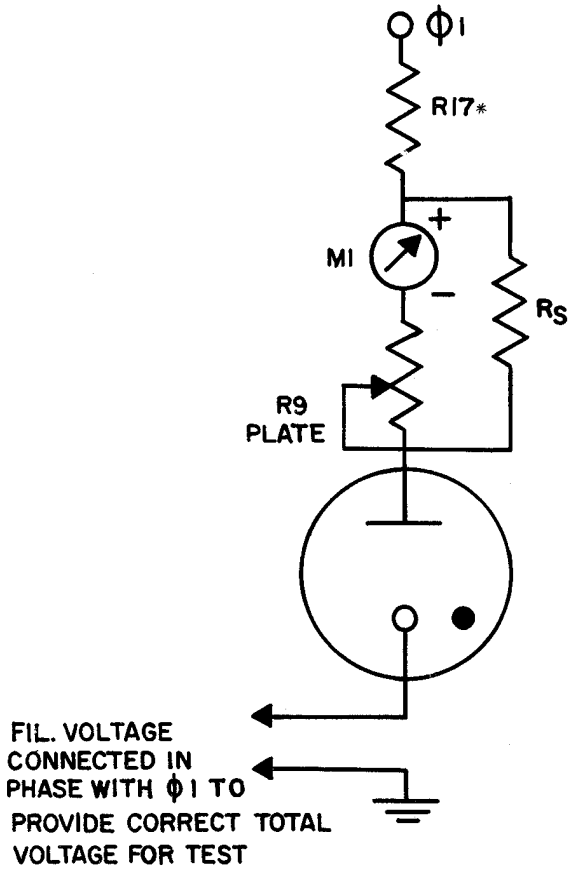

m) MERIT TESTING of OB2, OB3, OC3, & OD3 VR tubes.

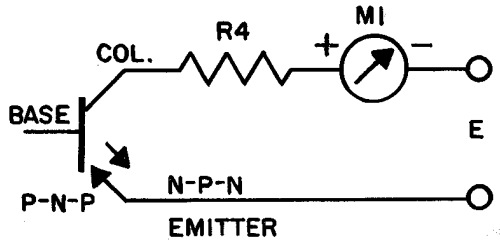

n) TRANSISTOR TEST 1 (I_{ceo})

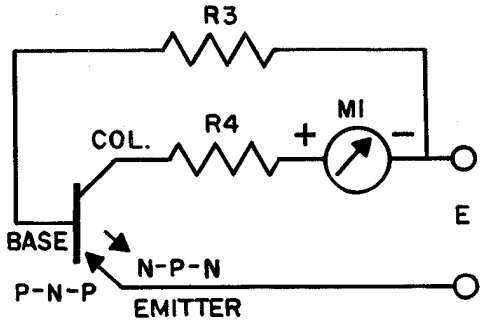

o) TRANSISTOR TEST 2 (Beta)

MAINTENANCE

GENERAL: Included in this section are instructions for internal adjustments, trouble-shooting, and part replacement. All internal adjustments must be performed in the order given on completed kit instruments before they can be placed in use. The same procedures will serve for periodic readjustments in both kit and factory-wired instruments when required by component aging or replacement.

REMOVAL FROM CABINET: To remove the instrument from the cabinet, first disconnect it from the power line and remove the 14 screws around the edges of the panel which fasten it to the flanges of the cabinet. As all components are assembled to the panel, removal consists simply of lifting the panel out of the cabinet.

WARNING: The operator is exposed to voltages as high as 300 volts A-C when the instrument is being operated outside of its cabinet. Take caution to avoid personal contact with these voltages

INTERNAL ADJUSTMENTS: a) Disassemble the panel from the cabinet and lift the instrument out. b) With the instrument in its normal operating position and no power applied, adjust the reading of the meter pointer to zero by turning the mechanical adjustment screw on the meter face. c) Connect an a-c voltmeter of any type across the 0-130V taps of the power transformer

and insert the line plug into a 105-130 volts AC, 60 cps line outlet. With no tube or transistor inserted in the test socket, and the TRANSISTOR TEST selector set at "TUBE", rotate the LINE ADJ. control R1 until the voltmeter reads 130 volts AC. d) Depress push-switch "C" so that it latches, and hold the metal clip on the cap lead against the panel so that it makes good electrical contact. Adjust the internal LEAK CAL. control, R7, for full-scale deflection on the meter (zero ohms on the leakage scale). e) Release the "C" push-switch by depressing the RESET push-button. Now depress the LINE push-switch and hold it down (this switch does not latch) while adjusting the LINE CAL. control, R18, for half-scale deflection (the short vertical "Line Adjust" on the meter scale). This completes the calibration of the instrument.

NOTE: The LEAK CAL. control, R7, is located on the underside of the chassis near the FILAMENT selector switch. The LINE CAL. control, R18, is also on the underside of the chassis, near the LINE ADJ. control.

CLEANING TUBE & TRANSISTOR SOCKET TERMINALS: After a long period of time, a film of dirt may form on the inside contact surfaces of the socket terminals which will prevent good contact with the inserted tube and transistor pins or leads. Spray or pour a little contact cleaner through the socket terminals, if this condition occurs, to remove the dirt film and restore good contact surfaces.

FUSE REPLACEMENT: A fuse in series with the primary winding of the power transformer protects the tube tester against damage due to overloading. Do not replace a blown fuse until you have located and corrected the cause of the failure, which can be any one of the following: a) incorrectly set controls; b) voltage applied to shorted elements; c) a short developed within the circuit of the tube tester. In the last case, it will be necessary to use the schematic diagram to locate and remedy the source of trouble. Note that the fuse is a type 3AG 1 ampere and that is mounted in a fuse clip on the side of the bracket supporting the power transformer. Do not use a higher ampere rating fuse type for replacement.

ROLL CHART MECHANISM: a) Springs: A small spring inside the roll chart mounting bracket provides a small tension against the bottom of one gear wheel to hold the roll chart in any position to which it is set. Excessive tension will impede fast rotation of the wheels when seeking tube information, and insufficient tension will result in a tendency of the roll chart to move from the set position. If necessary, reset the spring to provide the slight tension against the wheel required for satisfactory operation. b) Center shaft clips: There are speed-nut clips on either end of both center shafts that press against the outer wheel surfaces and hold the tube-and-wheels assemblies together. If these clips slip out of the shaft, the assemblies will become loose. Should this occur, it will be necessary to unscrew the bracket from the panel and remove the roller assemblies. Then press the clips against the outer wheel faces.

AVAILABILITY OF NEW TUBE & TRANSISTOR TEST DATA

ROLL CHARTS AND SUPPLEMENTS

As new tube and transistor types are released, an adequate number of samples of each type are carefully tested and rated in the EICO laboratories to establish the correct control settings for testing with the Model 667.

Periodically, new roll charts will be made available that include these new settings. With each new roll chart, a cumulative supplement of testing information on obsolete and rarely used types will also be supplied. When necessary, interim supplements of new testing information may also be made available.

NOTE: By filling out and returning to EICO the registration card included with each instrument, the owner can be assured of notification when new charts and supplements are made available.

USING INTERIM SUPPLEMENT OF NEW TUBE INFORMATION

The new testing information contained in interim supplements, which may be available from time to time, can be easily entered on the roll chart in current use as follows: a) Rotate the wheel to the blank space left on the roll chart for this purpose; b) Lift the plastic window out of the panel. (It snaps out of place); c) Enter the new data on the roll according to the headings lettered on the panel; d) Carefully check to see that you have made the entries correctly; e) Push the plastic window back into the panel again. It will snap into place.

ROLL CHART REPLACEMENT

Any new roll chart will include new testing data from previous interim supplements plus any additional testing data obtained up to the time of publication; all new types will appear in their proper positions on the new roll chart.

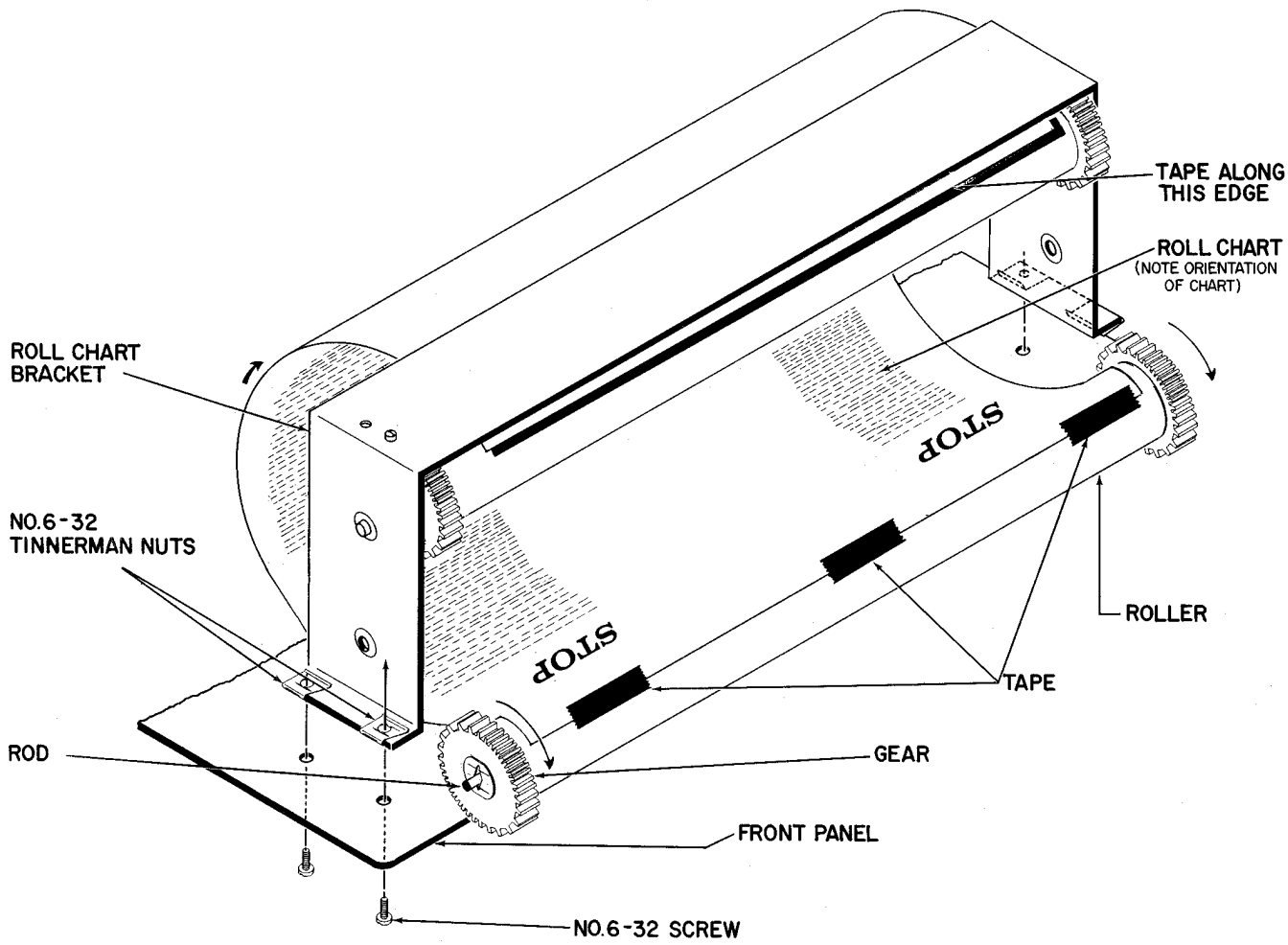

ROLL CHART ASSEMBLY

To install the roll chart, unfasten and lift out the panel assembly (the entire instrument) release both rollers and remove the rollers from the bracket. Install the new chart as follows: a) Fasten the top end of the chart to one roller with good quality adhesive tape. The printed surface of the chart must face away from the roller; b) Wind the chart onto the roller carefully, being certain that it does not wrinkle or bind on the side wheels; d) Place the other roller under the one on which the chart is wound so that adjacent gears mesh -- then pass the bottom end of the chart through the opening between the rollers and fasten it to the surface of the lower roller with another piece of adhesive tape (pull the chart tight onto the lower roller when you fasten the end to it); e) Insert the pair of rollers in the roll chart bracket with the full roll toward the open side, which when mounted is closest to the panel; f) Mount the bracket on the front panel with the four screws which were removed at the beginning of the replacement steps; g) Finally, check to see that the bracket has been mounted so that the printing on the chart reads right side up and that turning the wheels to roll the chart through its entire length does not reveal any binding on the wheels or the chart paper.

SPECIAL APPLICATIONS

CHECKING PILOT LAMPS AND CHRISTMAS TREE LAMPS

In the center of the NOVAR socket is a receptacle for miniature-base lamps. It is suitable for either screw or bayonet base types, since both have center contacts on the end of the base and shells around the side of the base to serve as the other contact. As the wall around the receptacle is grounded and the center contact of the receptacle is connected to the rotor of the FILAMENT selector switch, whatever filament voltage is selected will be applied to a miniature-base lamp inserted in the receptacle for testing. The test procedure, therefore, is the following: a) Set the FILAMENT selector to the rated voltage of the lamp; b) Depress the LINE button and turn the LINE ADJ. potentiometer until the meter reads at the LINE ADJ. mark on the scale; c) Insert the lamp in the test receptacle. A good lamp will light to its normal intensity.

DEVELOPING SETTINGS FOR NEW TUBES

Paragraphs a through k cover the procedure for all single triodes and pentodes. Paragraph l gives the procedure for half-wave rectifiers, and paragraph m the procedure for light-duty detecting diodes (usually in the same envelope with a triode or pentode). Paragraph n deals with testing dual-triodes, triode-pentodes, and full-wave rectifiers.

a) Set the TRANSISTOR TEST selector to "TUBE".

b) Set the FILAMENT selector switch to the required filament voltage. For center-tapped heaters, use the series connection with the higher filament voltage (see step c).

c) Set lever switches 1 through 12 and C to positions which will connect the proper source of voltage to each tube element. Levers 1 through 12 set the connections for base pins 1 through 12 respectively, and lever C sets the connection for the cap lead. The positions of the switches are as follows: 1 is ground; 2 is filament; 3 is screen or optional plate; 4 is plate; 5 is control grid; and 6 is open (no connection). The following rules must be observed: 1) One side of the filament must be grounded; filament taps must be connected to position 6; 2) For tubes having several pins connected to the same element, connect only one of these pins to the appropriate voltage (or ground, in the case of a cathode); all other such pins must be connected

to position 6; 3) Connect all unused pins and internal shields to position 1 (ground) unless otherwise specified by the manufacturer; 4) All detecting diode plates (such as in the 6SQ7) must be connected to position 6; 5) For tubes having a maximum allowable DC plate voltage less than 70 volts, position 3 must be used for the plate.

d) Insert the tube in the socket and allow it to heat up. Make the line adjustments in the usual manner. Then determine the push-buttons to be pressed in the leakage tests by consulting the base diagram of the tube and selecting the pin numbers which correspond to the elements. If the tube has an indirectly heated cathode, note which pin number is the cathode (for heater-cathode leakage testing). The pin numbers so determined correspond to the numbers of the push-button switches to press for the leakage tests. Enter the numbers of these push-buttons in the LEAK column of the roll chart, underlining the cathode button. It may be convenient to refer to a similar tube type in making these settings.

e) If the leakage tests described above show the tube satisfactory, proceed with the MERIT test procedure. If the leakage test results are unsatisfactory, do not proceed with further testing on the faulty tube, or the tube tester may be damaged.

f) Refer to the base diagram for the tube and determine the pin number for the plate. This push-button number should then be listed in the MERIT column and should correspond to the lever which you had set to position 4 (step c above). Press this button, remembering that this constitutes a plate-to-all leakage test until the MERIT lever is pulled down.

g) Refer to the published characteristics of the tube to find the maximum allowable plate current, or the highest typical operating current listed. Locate this plate current in one of the charts 1-5. Read the corresponding settings of the PLATE control and the chart number. Set lever S to the chart number, and the PLATE control to the value as read from the chart. Doing so establishes that the meter will read 100 on the scale when the plate current of the tube is equal to the desired value.

h) Consult the published tube characteristics again and find the maximum allowable dc plate voltage. Note that lever V applies 45 volts at position 1, 90 volts at position 2, and 180 volts at positions 3 and 4 (all in volts rms, 60 cps). The highest position of the V lever that may be used is the one at which the rms plate voltage applied does not exceed roughly two-thirds of the maximum rated dc plate voltage.

i) Set lever V at position 1 and the GRID control at 7. Hold down the MERIT lever and note the meter indication. Increase the GRID control until a meter indication of 100 is obtained. If this is not possible, release the MERIT lever, return the GRID control to 7, and advance the V lever to position 2. Again hold down the MERIT lever and adjust the GRID control for a meter indication of 100. Continue this procedure, setting lever V to positions 3 or 4, if necessary, to obtain the 100 meter indication. If the GRID control appears to "saturate", that is, if an increase in its setting causes very little increase in the meter indication, lever V should be advanced to the next position. Be careful not to exceed the maximum allowable plate voltage when making this setting. For the new 12 volt automobile radio types (30 volts dc maximum plate voltage), set the plate element lever to position 1 only. When the correct V lever and GRID control settings are found, release the MERIT lever and remove the tube from the tester.

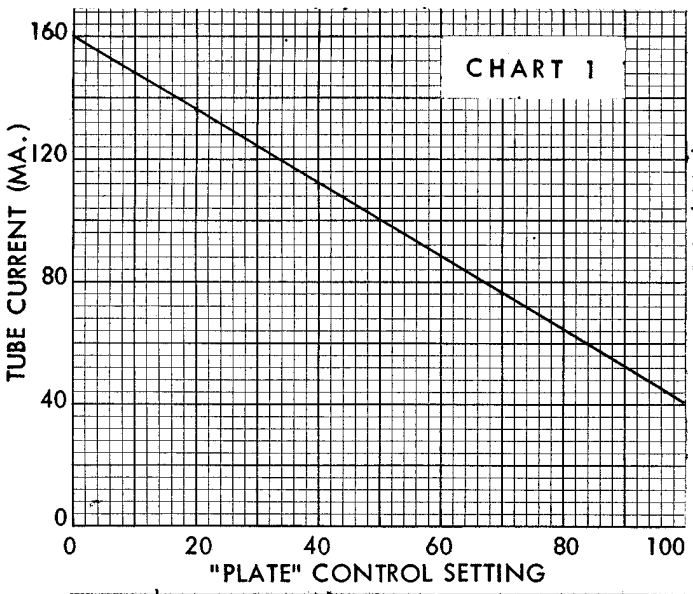

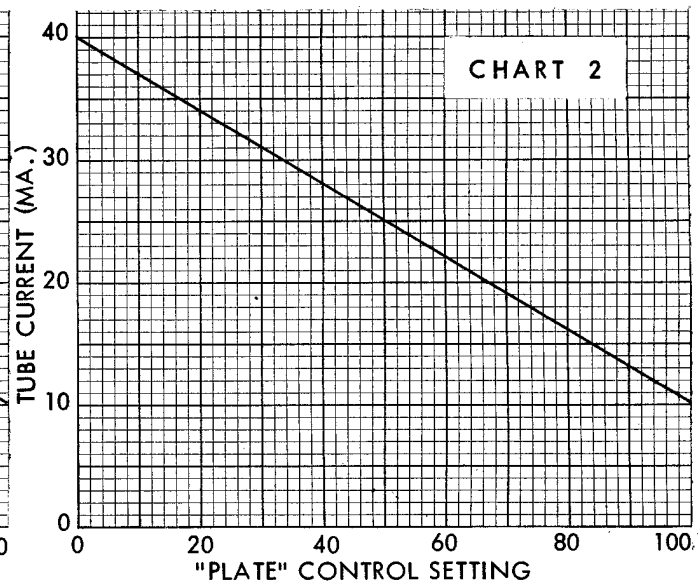

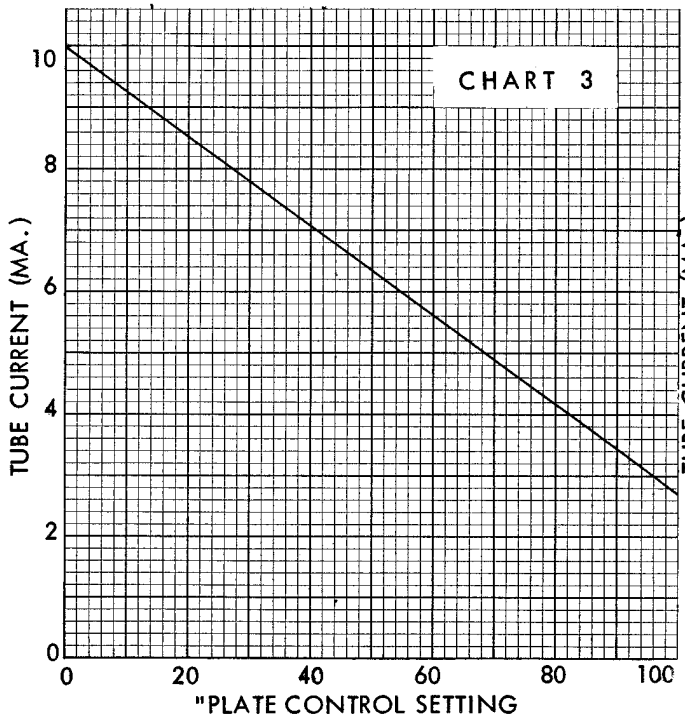

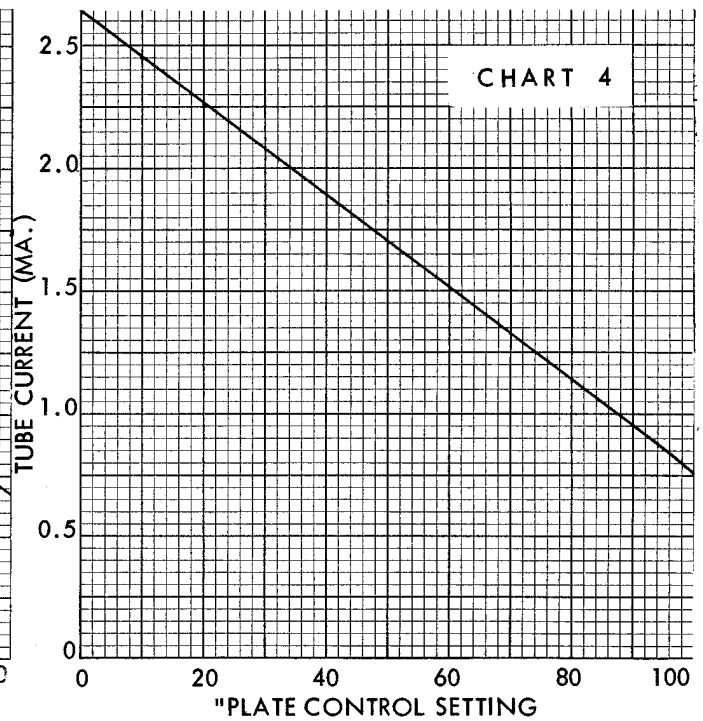

NOTES: 1. These charts show the actual tube (plate or screen) currents drawn when the meter reads 100 on the 0-140 scale. For any other meter readings, multiply the indicated currents (from the appropriate chart) by the fraction X/100, when X is the actual meter indication.

2. Chart 1 is used when the "S" lever is set at position 1, chart 2 is for position 2, chart 3 is for position 3, chart 4 is for position 4, and chart 5 is used for positions 5 and 6.

3. These charts are to be used for "MERIT" testing of tubes only; they do not apply for line adjustment, leakage, or transistor tests.

4. Normally, only plate currents are measured. However, screen currents can be checked in the same manner by depressing the push-button corresponding to the pin number of the screen (substitute this number for the one shown in the MERIT column of the roll chart). Then pull back on the MERIT lever and read as above.

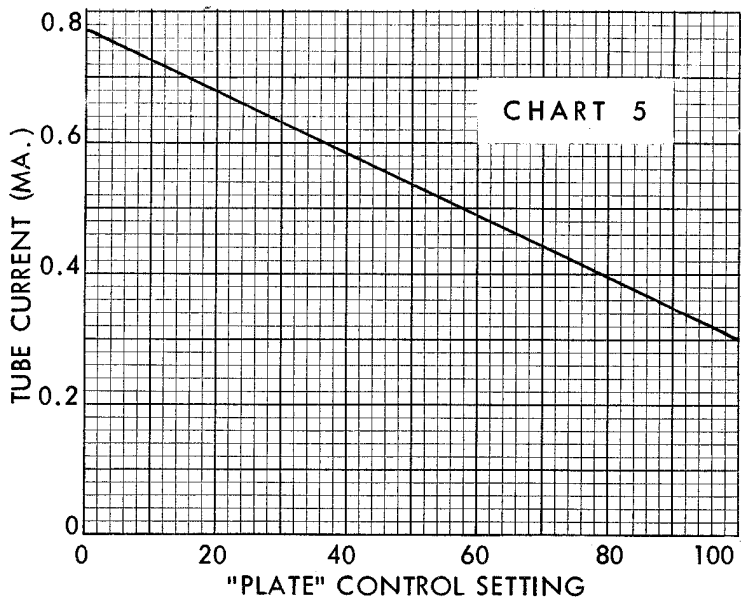

j) Obtain the GRID control settings that give a reading of 100 on the meter for several other tubes of the identical type and establish an average setting.

k) Record the final settings of all controls under the proper column headings on the roll chart. The settings so obtained will permit you to test other tubes of this type until information is obtained from EICO on a new roll chart or supplement. Note that the settings you obtain may differ from the settings obtained using standardized or "bogie" tubes.

l) For a power rectifier, the procedure for obtaining MERIT test settings is the same up to step h). (The S lever and the PLATE control are set as usual to cause a meter reading of 100 on the 0-140 scale when maximum allowable plate current is drawn.) The GRID control is set at zero to actuate the switch which inserts the 400Ω current-limiting resistor. The V lever is set to position 1 and the MERIT lever held down while the meter is read. If the reading is substantially below 100, move the V lever to position 2, providing the voltage rating of the tube is not exceeded. If the reading is still substantially below 100 move the V lever to position 3, again providing that the voltage rating of the tube is not exceeded. If and when you come to a position of the V lever for which the meter reading does appreciably exceed 100, return the V lever to the next lower position and adjust the PLATE control for a meter reading of 100. If this does not occur even at V lever position 3 (the same plate voltage is applied at position 4), adjust the PLATE control for a meter reading of 100 at this position; the current drawn will normally be sufficient for a good test. Completion of the procedure is covered in steps j and k above, except that instead of finding an average GRID control setting (step j), find an average PLATE control setting.

m) For light-duty detecting diodes, such as are normally included in the same envelope with a triode or pentode, MERIT test settings should be obtained after developing the settings for the triode or pentode section. As instructed earlier, the diode plate levers are set to position 6 (which position they retain for the triode or pentode test. It will therefore normally not be necessary to reset levers 1 through 12 & C when going from the triode or pentode test to the diode(s) test(s). The S lever is always set at position 6 and the preliminary PLATE control setting determined by

entering chart 5 at the maximum allowable diode plate current and reading off the corresponding PLATE control setting. The GRID control remains at the setting previously developed for the triode or pentode section (if any) in the same envelope. (Actually the GRID control setting has no effect in this test provided that it is set above 7; it is left at the previously developed setting to avoid unnecessary re-setting.) The V lever is set first at position 1 and the meter reading observed with the MERIT lever held down. Note that the voltage applied to the diode in this test is the grid voltage selected by the V lever; namely 5 volts at position 1, 15 volts at positions 2 and 3, and 45 volts at position 4 (all in volts rms, 60 cps). Refer to these voltages to determine whether the maximum voltage that can be applied to the diode is exceeded at any V lever position. If the meter reading at the V lever position 1 is substantially less than 100 on the 0-140 scale, proceed to positions 2 and 4 successively (position 3 is identical to 2 as regards grid voltage) if need be, observing the limitation of maximum allowable applied voltage. If and when you come to a position of the V lever for which the meter reading does appreciably exceed 100, return the V lever to the next lower position and adjust the PLATE control for a meter reading of 100. If this does not occur even at V lever position 4, adjust the PLATE control for a meter reading of 100 at this position; the current drawn will normally be sufficient for a good test. Completion of the procedure is covered in steps j and k above, except that instead of finding an average GRID control setting (step j), find an average PLATE control setting.

n) The foregoing applies only to single triodes, pentodes, light-duty diodes included in the same envelope with a triode or pentode, and half-wave rectifiers. For dual triodes or triode-pentodes, both sections of the tubes should have the correct operating voltages applies simultaneously. For a triode-pentode, connect the triode plate lever to position 3, the pentode plate lever to position 4, and the pentode screen lever to position 3; both control grid levers may be set at position 5. Refer to the roll chart settings for the 6U8 and 12AU7 for this type of operation. In the case of full-wave rectifiers, only the section under test has the operating voltage applied. Refer to the roll chart settings for the 5U4 as a typical full-wave rectifier.

REPLACEMENT PARTS LIST FOR 667

SYM. #	STOCK #	AM'T.	DESCRIPTION
C1	23010	1	capacitor, elec., 10mf-150V
C2	23001	1	capacitor, elec., 10mf-25V
CR1	93003	1	rectifier, 50ma
CR2	95000	1	rectifier, diode
F1	91002	1	fuse, 1 amp
I1	92006	1	pilot lamp
M1	72015	1	meter, 200ua, 1KΩ
R1	19012	1	potentiometer, WW, 200Ω, 25W, w/SPST
R2	10406	1	resistor, 680Ω, 1/2W, 10%
R3	11026	1	resistor, 200K, 1/2W, 1%
R4	10432	1	resistor, 1K, 1/2W, 10%
R5	11062	1	resistor, 129Ω, 1/2W, 1%
R6	11061	1	resistor, 50Ω, 1/2W, 1%
R7	18023	1	potentiometer, 100K, (LEAKAGE CAL.)
R8	10544	1	resistor, 270K, 1/2W, 5%
R9	19010	1	potentiometer, 3K, 4W, 5%
R10	11056	1	resistor, 683W, 1/2W, 1%
R11	11057	1	resistor, 171Ω, 1/2W, 1%
R12	11058	1	resistor, 42.7Ω, 1/2W, 1%
R13	11059	1	resistor, 10.7Ω, 1/2W, 1%
R14	11060	1	resistor, 3.57Ω, 1/2W, 1%
R15	10774	1	resistor, 24K, 1W, 5%
R16	19011	1	potentiometer, 5K, 4W, 5% w/SPST
R17	14504	1	resistor, 400Ω, 5W, 10%
R18	18023	1	potentiometer, 100K, (LINE CAL.)
R19	10544	1	resistor, 270K, 1/2W, 5%
R20	14505	1	resistor, 3K, 5W, 10%
SA1	65006	1	switch assembly, push button (S1-S14)
SA2	65005	1	switch assembly, lever (S15-S29)
S30	60042	1	switch, rotary 22 pos. (FILAMENT)
S31	60046	1	switch, rotary, 5 pos. (TRANSISTOR)
S32			switch, (part of R1) (AC-OFF)
S33	64001	1	switch, push button (LINE)
S34	63000	1	switch, lever (MERIT)
S35			switch (part of R16)
T1	30017	1	power transformer
XF1	97802	1	fuseholder
XI1	97709	1	pilot lite assemble
XTR1	97043	1	socket, transistor
XV1	97029	1	socket, 7 pin sub-miniature
XV2	97072	1	socket, 5 pin NUVISTOR
XV3	97073	1	socket, 7 pin NUVISTOR
XV4	97024	1	socket, 7 pin miniature
XV5	97030	1	socket, 8 pin sub-miniature
XV6	97068	1	socket, 10 pin
XV7	97003	1	socket, OCTAL
XV8	97074	1	socket, NOVAR w/bulb socket
XV9	97064	1	socket, 12 pin COMPACTRON
XV10	97001	1	socket, LOCTAL
	40000	22	nut, hex, No. 6-32
	40001	6	nut, hex, 3/8"
	40004	2	nut, hex, No. 2-56

STOCK#	AM'T.	DESCRIPTION
40007	6	nut, hex, No. 4-40
40016	1	nut, hex, 1/2"
40017	8	nut, Tinnerman, No. 8
40019	4	nut, Tinnerman, No. 6
40021	4	clip, Tinnerman, push on
40023	1	nut, push on (8 pin sub-miniature)
40024	1	nut, push on (7 pin sub-miniature)
41003	8	screw, No. 8-32 x 3/8
41035	14	screw, No. 6-32 x 1/4 self-tapping
41086	20	screw, No. 6-32 x 5/16
41089	1	screw, No. 6-32 x 3/16 Rd. Hd.
41090	8	screw, No. 4-40 x 5/16
41106	2	screw, No. 2-56 x 3/8
42001	5	washer, flat, 3/8"
42002	26	washer, lock, No. 6
42007	6	washer, lock, No. 4
42029	1	washer, rubber, 1/2"
42053	2	washer, lock, No. 2
46001	1	grommet, rubber, 1/4"
53011	5	knob, control, round bar
53012	15	knob, push, black
53013	1	knob, push, red
53072	16	knob, lever type, black
57000	1	linecord, black
80139	1	panel
81081	1	bracket, transformer
81083	1	bracket, roll chart
81959	1	bracket, left
81960	1	bracket, right
82101	1	strain relief
87002	1	handle, plastic folding
88028	1	cabinet
88029	1	cover
89726	1	roll chart
89565	4	gear, roll chart drive
89566	2	roller, roll chart drive
89567	2	rod, roll chart drive
89568	1	damper, roll chart drive
89569	2	window, plastic
98501	1	cap, grid, black, insulated
89727	1	supplement, roll chart
66120	1	Instruction Manual
66367	1	Construction Manual (Steps & Figures)

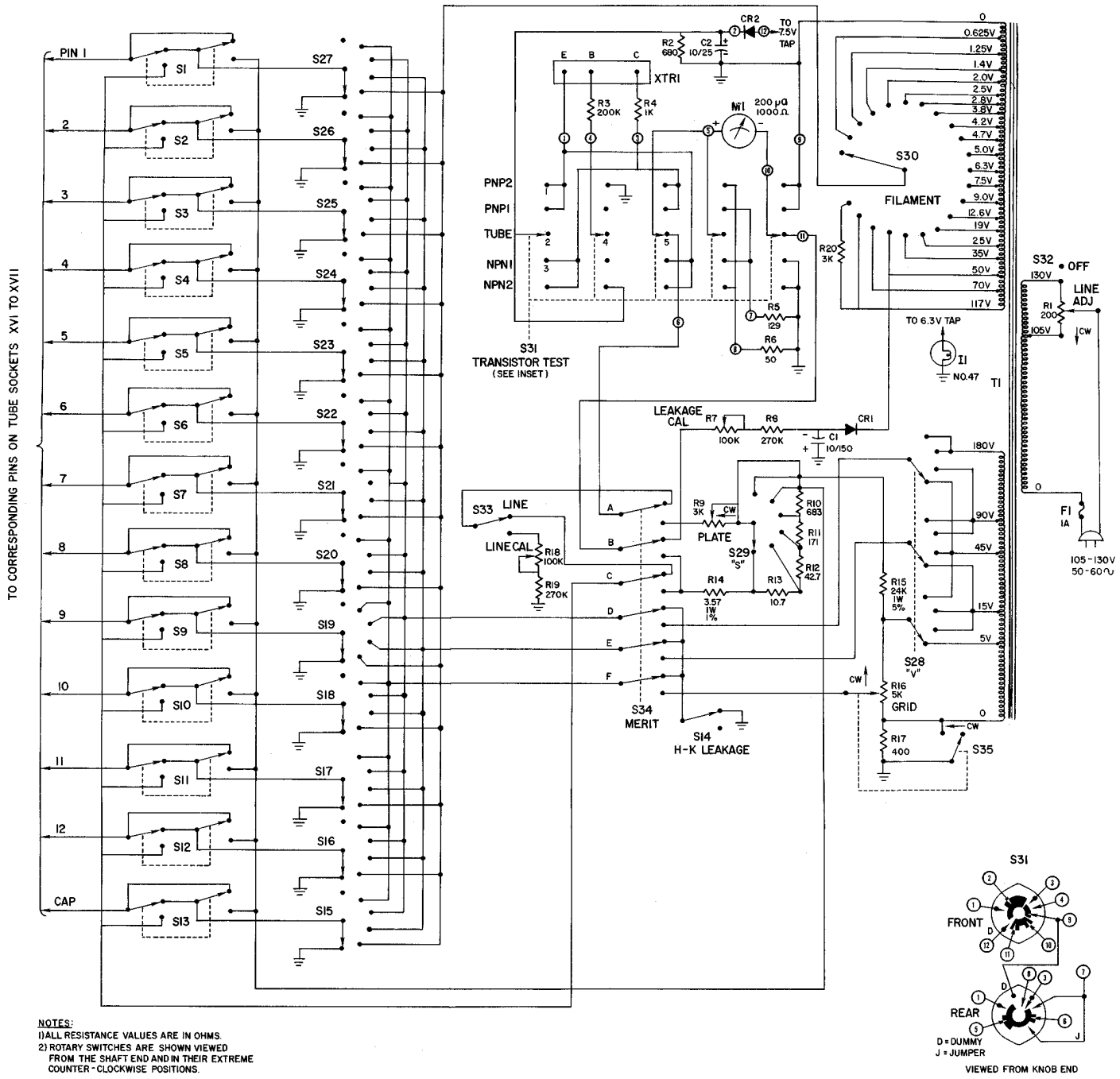

NOTES:
1) ALL RESISTANCE VALUES ARE IN OHMS.
2) ROTARY SWITCHES ARE SHOWN VIEWED FROM THE SHAFT END AND IN THEIR EXTREME COUNTER-CLOCKWISE POSITIONS.

SCHEMATIC FOR 667

EICO
Service Policy

PARTS REPLACEMENT

If it appears that a component is defective, and you desire a replacement, contact your nearest EICO Authorized Service Agency or our Customer Service Department.

If you are claiming the right to a no-charge replacement under the terms and conditions of the warranty, it is required that you shall have sent in the registration card within 10 days of the date of purchase, and that you send back the defective part transportation prepaid. In claiming warranty service or parts, please send or show your **original sales slip** plus the IBM card from the carton. EICO or its authorized agency will make the necessary replacement at no charge for parts eligible under the terms and conditions of the warranty. In returning tubes, pack them very carefully to avoid breakage in shipment. Broken tubes will not be replaced. Please read the warranty on the subject of parts eligible for replacement.

Further information required on a part returned for a no-charge replacement under the terms and conditions of the warranty is as follows:

a) Model number and serial number, if any, of unit. Also any code numbers in red under the words INSTRUCTION MANUAL on the cover of the book supplied with the unit.

b) **Stock number and description of part as given on the parts list. If the part is not listed (of itself) in the parts list, it means that the part is integral with a sub-assembly, which we consider replaceable only as an entity. Parts integral with a sub-assembly may be listed in the parts list, so identified, if we consider that some or all of the parts may be individually replaced in the field under appropriate circumstances. If your unit is out of warranty, you are generally advised to order a replacement sub-assembly.**

c) Describe as completely as possible the nature of the defect, or reason for requiring replacement.

REPAIR SERVICE

EICO maintains a national network of authorized service agencies for in-warranty or out-of-warranty repair of EICO equipment. It is intended to serve those customers who are not sufficiently familiar with electronics to make use of the EICO Service Consultation facilities, or whose difficulties cannot be solved by correspondence.

For all out-of-warranty units, there is a minimum labor and handling fee. Charges for parts replaced are additional to the minimum fee.

For in-warranty completed kit units, there is a minimum labor and handling fee. There is no charge for a replaced defective part provided that the terms and conditions of the warranty for no charge replacement are not violated in the judgement of EICO.

For in-warranty factory-wired units, there is no charge for labor or parts if the unit complies with the terms and conditions of the warranty in the judgement of EICO. However, if the terms and conditions of the warranty are violated there will be a charge for labor plus parts.

In all cases, the unit must be sent to the factory or service agency transportation prepaid, and the unit will be returned to the customer transportation collect.

On kits, the services rendered for the minimum labor and handling fee are the correction of any minor wiring errors (not extensive corrections or rewiring), the labor involved in replacing defective parts, and any adjustments, alignment, or calibration procedures that would normally be performed on a factory-wired unit. Units not wired according to instructions, or modified in any way, or showing evidence of the use of acid core solder, will not be serviced and will be returned to the customer forthwith.

SEE OUR SCHEDULE OF SERVICE CHARGES

Units requiring extensive corrections or rewiring will incur an additional labor charge. An advance estimate will be submitted.

Please note: minimum labor and handling fees and service charges are subject to revision at any time.

LOCAL REPAIR FACILITIES

A list of authorized service stations is provided with this manual. The roster of stations may change from time to time, and if considerable time has elapsed since you purchased your unit, you are advised to contact the station you choose before sending the unit to them for repair. Use of a local service station will often result in faster service, and, usually, lower transportation costs.

It is necessary that you comply with the Shipping Instructions that follow when sending in a unit for service.

SHIPPING INSTRUCTIONS

You are strongly advised to retain the original shipping carton and inserts should reshipment be required for service or any other purpose. The carton may be collapsed for storage in as small a space as possible. In very many cases, the same carton is used for kit and factory-wired units so that the kit carton will serve for reshipment of the completed kit.

When sending a unit for service pack the unit very carefully, preferably in the original shipping carton **with the original inserts.**

If this is not possible, use a strong oversize carton, preferably wood, and using at least 3 inches of resilient packing material such as shredded paper or excelsior inserted between all sides of the unit and the carton. Seal the carton with strong gummed paper tape or strong twine or both. Attach a tag to the instrument on which is printed your name and address and brief reference to the trouble experienced. Affix "FRAGILE" or "HANDLE WITH CARE" labels to at least four sides of the carton or print these words large and clear with a bright color crayon. Ship prepaid.

Include your name and address on the outside of the carton. Return shipment will be made transportation charges collect. Note that a carrier cannot be held liable for damage in transit, if packing, IN HIS OPINION, is insufficient.

THE EICO WARRANTY

The Electronic Instrument Company, Inc., hereafter referred to as EICO, warrants that, for a period of 90 days from the date of purchase, any EICO kit will be free of defects in parts, and that any EICO factory-wired unit will be free of defects in parts and workmanship. For an EICO kit, EICO's obligation is limited to those parts which are returned transportation prepaid to the factory or authorized service agency without further damage, and in the judgement of EICO are either originally defective or have become defective in normal use. EICO's obligation does **not** include any labor required to locate trouble in or repair a kit. For an EICO factory-wired unit, EICO's obligation is limited to replacement or repair, at EICO's option, of those parts, sections, or entire units returned transportation prepaid to the factory or authorized service agency without further damage, and in the judgement of EICO are either originally defective or have become defective in normal use.

The warranty does not apply to any parts damaged in the course of handling, assembling, or wiring by the customer, or damaged due to abnormal usage or in violation of instructions or reasonable practice, or further damaged to a consequential degree in return shipment. Furthermore, the foregoing warranty is made only to the original customer, and is and shall be in lieu of all other warranties, whether expressed or implied, and of all other obligations or liabilities on the part of EICO, and in no event shall EICO be liable for any anticipated profits, consequential damages, loss of time, or other losses incurred by the customer in connection with the purchase or operation of EICO products or components thereof.

The registration card, which accompanies each EICO kit or factory-wired unit, must be filled in and returned to the company within 10 days after the date of purchase. This warranty applies only to registered units.

SCHEDULE OF SERVICE CHARGES

1. Same prices for wired units or completed kits.
2. Charges are based on the schedule of minimum charges above. Some exceptions are noted below.
3. If the published rate is $ 5.00-$ 6.00, this covers up to 1 hour of labor time (minimum $5.00).
   If the published rate is $ 6.50-$ 8.00, this covers up to $1\frac{1}{2}$ hours.
   If the published rate is $ 9.00-$10.00, this covers up to 2 hours.
   If the published rate is $11.00-$14.50, this covers up to $2\frac{1}{2}$ hours.
   If the published rate is $15.00-$20.00, this covers up to $3\frac{1}{2}$ hours.
4. Time required in excess of these minimum charges is calculated at $5.00 per hour.
5. Above prices are for labor only. Parts are additional.
6. Miscellaneous prices not published in manuals are:
   Probes - $2.00 RP-100 Playback amp. only or
   CRA & CRU - $3.00 Power Supply only
   or Record amp. only . . . $5.00
   2536 Printed Circuit Board - $5.00.
7. ESTIMATES: An estimate for repairs will be given before repairs are made where repairs will exceed stated minimum charges. If you choose not to have your unit repaired, a charge of $3.00 for estimating time will be made.
8. All prices are subject to change without notice.

MINIMUM LABOR AND HANDLING FEES

AF4	$ 7.50	488	5.00
RA6	5.00	495	5.00
HF12	7.50	526	5.00
HF14	5.00	536	5.00
HF20	10.00	540	5.00
HF22	5.00	555	5.00
HF30	5.00	556	5.00
HF32	9.50	565	5.00
HF35	5.00	566	5.00
ST40	15.00	584	5.00
HF50	5.00	610	5.00
HF52	10.00	612	5.00
HF60	5.00	625	6.00
HF61	6.00	628	7.00
HF61A	6.00	630	5.00
HF65	6.50	632	7.00
HF65A	6.50	666	10.00
ST70	15.00	667	10.00
HF81	13.50	680	6.00
ST84	10.00	706	5.00
HF85	8.00	710	5.00
HF86	9.00	720	13.50
HF87	9.00	722	9.00
HF89	9.00	723	7.50
HFT90	7.50	730	7.50
HFT92	9.00	740	9.00
HFT94	7.50	760	9.00
ST96	13.50	761	9.00
ST97	13.50	762	9.00
MX99	7.50	770	12.00
RP100*	*	771-2	12.00
		777	20.00
145	5.00	803	5.00
145A	5.00	944	5.00
147	5.00	950	5.00
214	6.00	955	6.00
221	6.00	965	15.00
222	7.00	1020	5.00
232	6.00	1050	5.00
249	6.00	1055	5.00
250	7.00	1060	5.00
255	7.00	1064	6.00
260	7.00	1073	5.00
315	6.00	1078	5.00
320	5.00	1100	5.00
322	5.00	1120	5.00
324	5.00	1140	5.00
352	5.00	1171	5.00
360	5.00	1180	5.00
368	12.50	2036	13.50
369	12.50	2050	13.50
377	6.00	2080	13.50
425	6.00	2200	10.00
427	12.50	2400*	*
430	12.50	2510	12.00
435	15.00	2536	17.50
460	15.00	2715/16	10.00
470	15.00	3566	25.00

* Model RP100 and Model 2400 will be billed on the basis of $10.00 for the first hour and $5.00 each additional hour, with a maximum unauthorized repair of $50.00 for the kit and $25.00 for a wired unit.

EICO ELECTRONIC INSTRUMENT CO., INC.
131-01 39th Ave., Flushing, N.Y. 11352

Effective 9/30/64

AUTHORIZED WARRANTY SERVICE AGENCIES

ALABAMA

Hueytown
Electro-Mechanical Assoc.
3182 Warrior River Rd.

Mobile
Arnold's TV Service
1259 Eslava Drive

ARIZONA

Phoenix
Sigma Electronics
602 N. 3d St.

Tucson
Park Music Shop
1702 E. Speedway

CALIFORNIA

Anaheim
United Sound & TV Co.
2010 W. Lincoln Ave.

Los Angeles
Electronic Instrument Service
8907 So. Vermont Ave.

United Sound & TV Co.
5036 Venice Blvd.

San Mateo
Electro Service Co.
240 Main St.

San Francisco
Prompt Radio & TV Co.
3143 Mission St.
(Hi-Fi & Tape Recorders only)

COLORADO

Denver
A.B. & K. Service, Inc.
1459 South Pearl St.

CONNECTICUT

Norwich
The La Course Radio Electric Service
184 Franklin St.

Windsor
Hickory Electronics Co., Inc.
21 Maple Ave.

DISTRICT OF COLUMBIA

Washington
Sylvan Radio & TV Co.
306 Kennedy St., N.W.

FLORIDA

Miami
Southern Authorized Factory Service
62 N.W. 27th Ave.

North Miami Beach
Southeastern Communications, Inc.
2055 N.E. 151st St.

West Palm Beach
Northwood TV & Service Co.
2317 North Dixie

IDAHO

Twin Falls
TV Tuner Service
P.O. Box 793

ILLINOIS

Chicago
B & S Electronics, Inc.
6326 W. Roosevelt Rd.

Electronic Engineers, Inc.
5615 W. Division St.

INDIANA

Indianapolis
Aid TV & General Appliance
4145 North College Ave.

La Grange
Westview Electronics
R.R. 4

KANSAS

Wichita
Alan Appliance Service, Inc.
339 North Main St.

KENTUCKY

Louisville
Maury's Fluorescent & Appl. Service
962 South 3d St.

LOUISIANA

New Orleans
Industrial Inst. Works
3305 Tchoupitoulas St.

MAINE

South Portland
Air-Tronics
Port O'Maine Airport
Pleasant Hill Rd.

MARYLAND

Baltimore
Clayton Electronics, Inc.
4723 Gwynn Oak Ave.

Bethesda
American Technical & Service
4961 Bethesda Ave.

MASSACHUSETTS

Boston
Park Armature Co.
1218-30 Columbus Ave.

Medford
Electron TV & Hi-Fi
229 Salem St.

MICHIGAN

Detroit
The Audio Clinic
17125 W. McNichols

MINNESOTA

Minneapolis
Andersen Audio Laboratory
4145 Minnehaha Ave. South

MISSOURI

Kansas City
Carroll Electronics
2410 Grand Ave.

Kansas City Calibration Lab.
4034 Broadway
(Instruments Only)

St. Louis
Scherrer Instruments
5449 Delmar Blvd.

A.A. Kelley Radio & Elect. Service
4181 Manchester

NEW JERSEY

Irvington
Audio Service Labs
1422 Springfield Ave.

Riverside
Lou's Electronic Service
727 Baylor St.

NEW MEXICO

Alburquerque
Ed's TV & Hi-Fi
301 Maple Ave. N.E.

NEW YORK

Binghamton
Ross' Radio & TV Service
116 Main St.

Hastings on the Hudson
Central T.V. Hi-Fi Service
543 Warburton Ave.

Huntington Station
Suffolk Sound Repair, Inc.
1671 New York Ave.

New Hyde Park
Ethical Electronic Service
3330 Hillside Ave.

New York City

Brooklyn
Marveltone Recording Service
1168 Flatbush Ave.

Manhattan
Marveltone Recording Service
105 W. 72nd St.

Winters' Radio Laboratory
11 Warren St.

Queens
H & E Clock and Elect. Corp.
144-33 Jamaica Ave.

Schenectady
Wide Enterprises, Inc.
612 Union St.

Vestal
Compton Industries, Inc.
333 Vestal P'kway East

West Hempstead
Audotronic, Inc.
96 Hempstead Turnpike

NORTH CAROLINA

Charlotte
Tryon Repair Service
3125 Tuckasegee Rd.

Raleigh
Speed Instrument Co.
3028 E. Rothgeb Dr.
(For Instruments Only)

Winston-Salem
Electronic Services
150 Woodrow Ave.

OHIO

Cleveland
Bob Whitlow Radio & TV
13914 St. Clair Ave.

Dayton
Far Hills Service Center
45 W. Whipp Rd.

Toledo
Dave's Radio & TV
3112 Upton at W. Central

OKLAHOMA

Oklahoma City
Audio Specialties
1010 North Virginia

OREGON

Portland
Hunter's Video Sonic
4059 N.E. Sandy Blvd.

PENNSYLVANIA

Collegeville
Central Communications
170 First Ave.

Havertown
Michael's TV & Radio Service
1127 West Chester Pike

Lehighton
Lehighton Electronics
P.O. Box 281

Philadelphia
Electronic Servicenter
13 S. 21st St.

Sunshine Scientific
1810 Grant Ave.
(Instruments only)

Woodlyn
Altron Electronics Co.
1309 Jefferson Ave.

SOUTH CAROLINA

Cayce
Cayce Radio-TV, Appliances, Inc.
906 Knox Abbott Dr.

TEXAS

Abilene
Vol's Repair Shop
1417 Marshall

El Paso
Test Equipment Co.
5319 Harlan Dr.

La Feria
La Feria Radio & TV Service

Wichita Falls
Ken Dixon Radio & TV
2612 Grant St.

UTAH

Bountiful
Anderton Electronic Lab.
129 E. 1800 South

VIRGINIA

Arlington
Washington Electronic Service Co.
122 South Wayne St.

Norfolk
Dixie TV Service
1107 W. Little Creek Rd.

WASHINGTON

Seattle
Ron Merritt Co.
1320 Prospect St.

CANADA

Toronto, Ontario
John R. Tilton, Ltd.
51 McCormack St.

Vancouver
National TV Service Co., Ltd.
2145 Commercial Drive