TWILIGHT SWITCH

THIS circuit is designed to switch on a low-power lamp when it gets dark and switch it off again at sunrise. It could, for example, be used as a burglar deterrent to give the impression that a house is occupied, or to light a path or porch during the hours of darkness.

With a slight modification, it could also be used as a medicine cupboard alarm to give a warning when it has been opened or, by changing the sensor, as a temperature controller (thermostat).

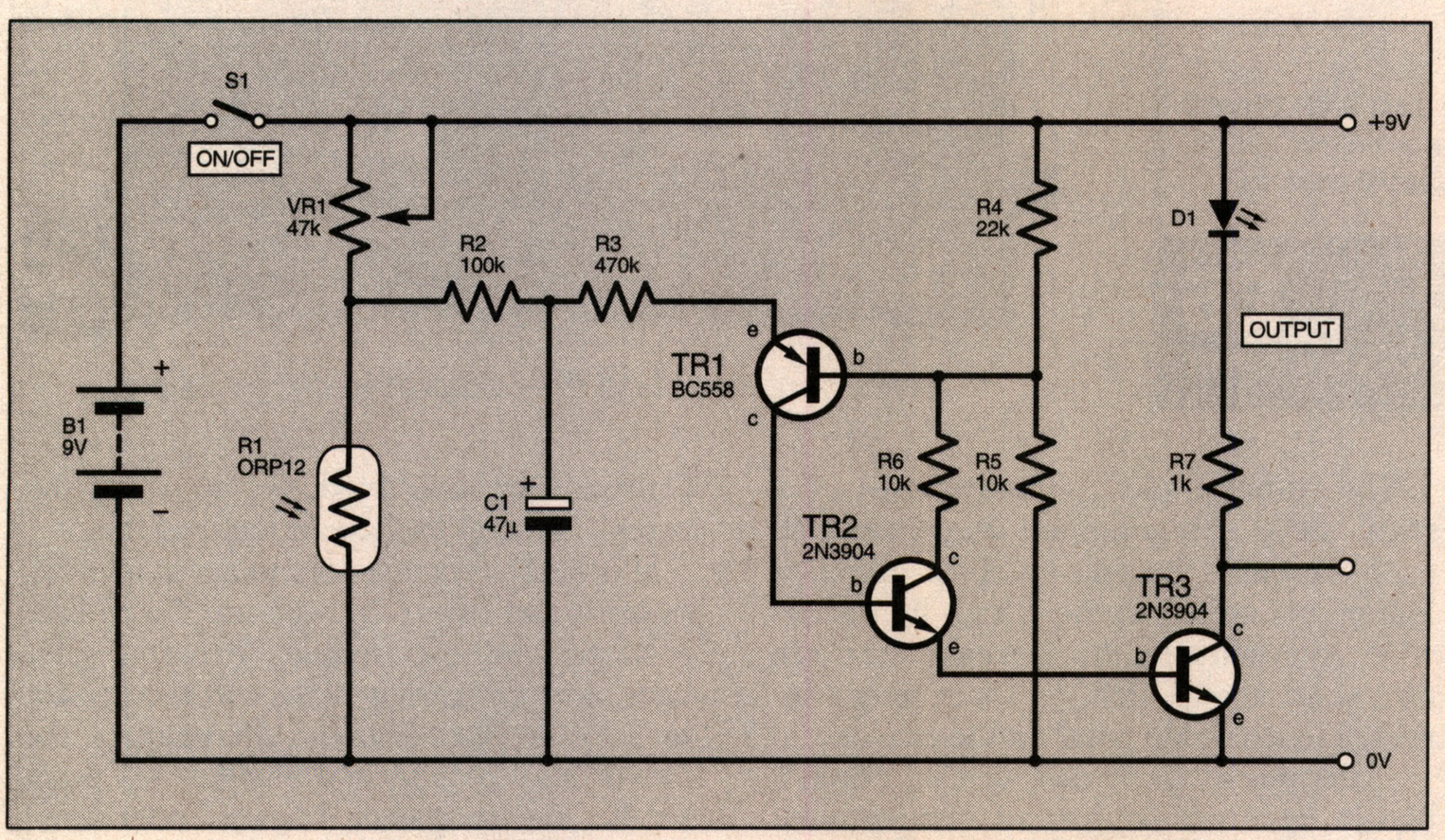

Fig.32. Circuit diagram for the light sensitive Twilight Switch.

CIRCUIT DETAILS

Referring to the circuit diagram in Fig.32, light dependent resistor (l.d.r.) R1 is used as the light sensor. In bright conditions, its resistance is around 2kΩ rising to over 20kΩ in low light and over 1MΩ in darkness.

Transistors TR1 and TR2 form a complementary Schmitt trigger circuit that has two switching thresholds. Assuming both TR1 and TR2 are on, resistors R4 and R5 are connected across the power supply as a potential divider. They set the voltage applied to the base of TR1 at just under 3V, assuming a 9V supply.

With the l.d.r. in darkness, the voltage at its junction with preset VR1 will be above that on TR1's base. The sensor voltage is applied to TR1's emitter via resistors R2 and R3. Capacitor C1 smooths out fluctuations in light intensity during daylight conditions, such as caused by shadows moving across the l.d.r., or illumination by car headlights at night.

LIGHT LEVELS

During darkness, the voltage from the l.d.r. will be sufficient to cause transistor TR3 to be turned on via TR1 and TR2. As a result, l.e.d. D1 is switched on, via ballast resistor R7.

As the light level increases, the resistance of the l.d.r. falls so that the input voltage to the circuit also falls. Once it falls below 2V, TR1 begins to switch off. This causes TR2 to switch off raising the voltage on TR1's base, causing both transistors to switch off rapidly. With TR2 off, TR3 also switches off, as does l.e.d. D1.

With falling light levels, the l.d.r. resistance increases and the voltage at TR1's emitter rises. However, since TR2 is off, the threshold voltage will now be determined only by R4 and R5 (about 3V with the component values given). The input level will therefore have to rise above this value before TR1 can switch on and the circuit revert to its former state with all three transistors on.

It will be seen that there is a difference between the brightness levels at which the circuit switches on and off. This property is called hysteresis and is useful as it gives the circuit a "snap" action, switching on and off rapidly even if the input is changing slowly. It also prevents the lamp switching on and off as the thresholds are approached. Note that altering the value of R6 will vary the hysteresis.

MAINS OPTION

Transistor TR3's collector load, comprising l.e.d. D1 and R7, could be replaced by, or used in conjunction with, an opto-isolated triac or a relay to switch on a mains lamp, as shown in Fig.33b and Fig.33c.

Note that the mains voltage existing at the output of both these circuits is dangerous and these two options should only be built under competent supervision. Suitable insulation, earthing and fuse arrangements must be provided.

The opto-triac type MOC3020 can handle output currents up to 100mA, i.e. a maximum of 23W of 230V a.c. mains power. The typical maximum size of mains driven lamp that can be used with it is thus approximately 15W.

With relay control, the maximum lamp power is limited only by the rating of the relay contacts.

A problem that could be encountered if a mains lamp is fitted is that of the circuit oscillating. When the light level falls, the light will switch on and the ambient brightness will increase causing the lamp to switch off again. The large hysteresis should help to prevent this but it is important that the sensor is positioned so that it cannot "see" the light from the lamp.

COMPONENTS

Resistors

R1	ORP12 light dependent resistor
R2	100k
R3	470k
R4	22k
R5, R6	10k (2 off)
R7	1k

All 0·25W 5% carbon film

See SHOP TALK page

Capacitor

C1	47µ radial elect. 16V

Semiconductors

D1	red l.e.d.
TR1	BC558 *pnp* transistor
TR2, TR3	2N3904 *npn* transistor (2 off)

Miscellaneous

S1	s.p.s.t. min. toggle switch
VR1	47k skeleton preset potentiometer
WD1	piezo buzzer

Stripboard, 14 holes x 7 strips; PP3 battery and clip; case to suit (see text); relay (optional), 12V coil with mains contacts, opto-triac (optional) MOC3020 or M0C3040, 12V Buzzer (optional); connecting wire; solder, etc.

Approx. Cost Guidance Only **£6**
excl. case, relay, opto-triac & batt.

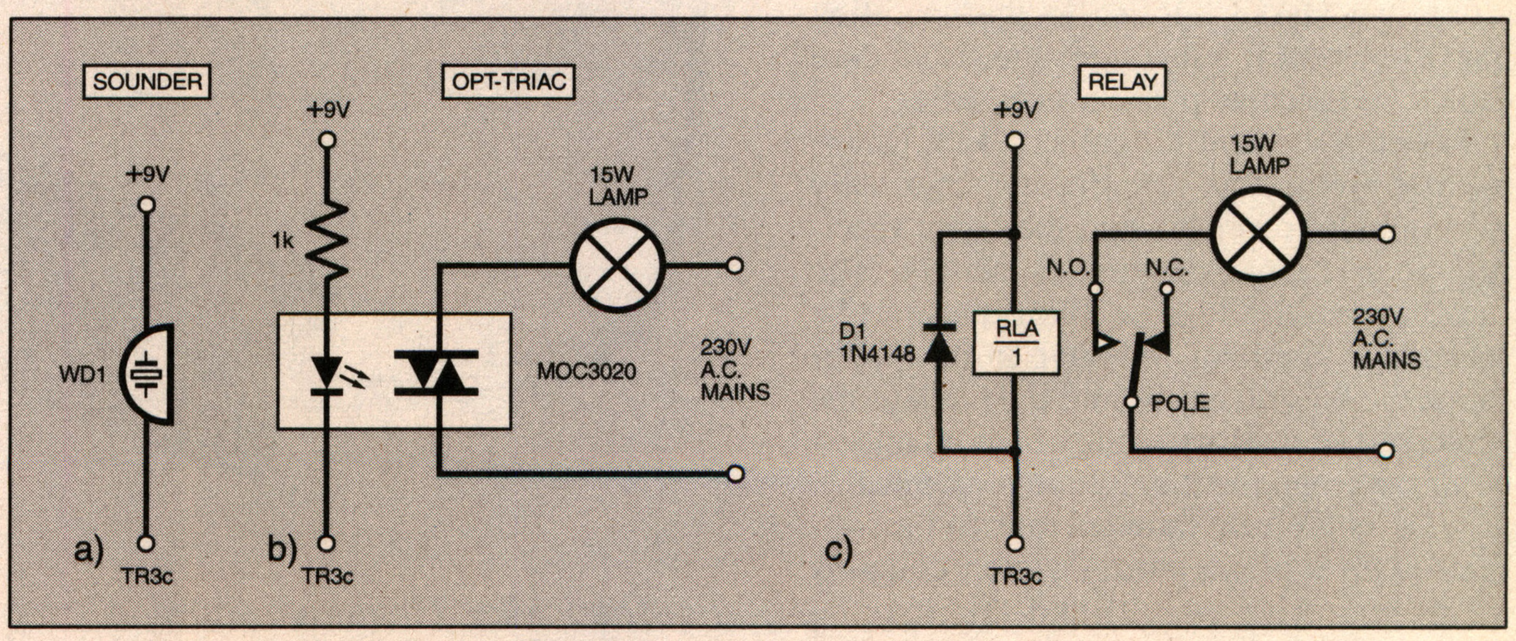

Fig.33. Circuit details for alternative output options.

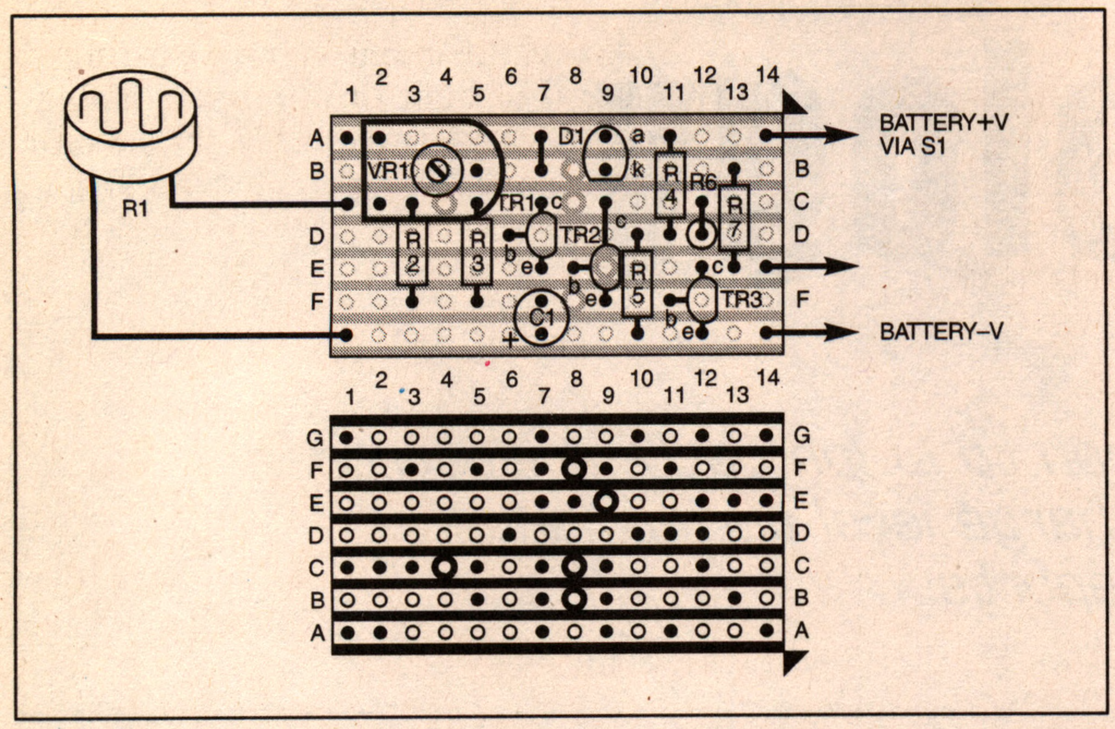

Fig.34. Component layout, wiring and copper break details.

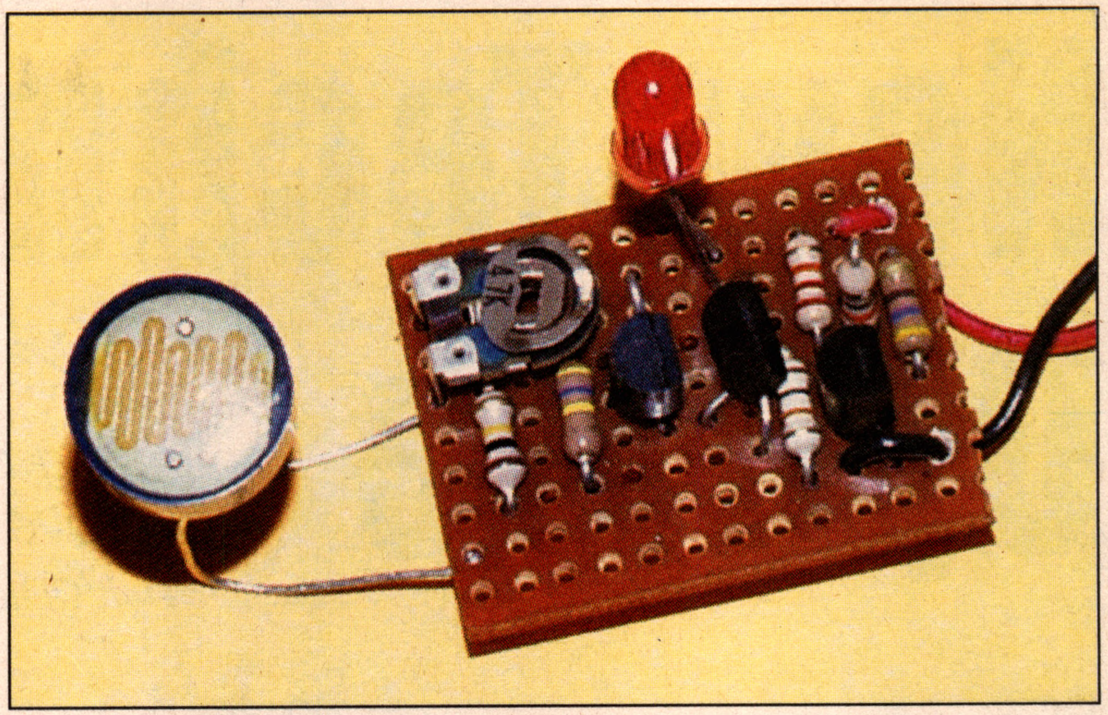

Completed prototype Twilight Switch.

OTHER OPTIONS

A simple thermostat could be built by replacing the l.d.r. with an n.t.c. thermistor (negative temperature coefficient – resistance falls with increases in temperature). Depending on the resistance of the type used, the value of VR1 may need to be altered.

By connecting a buzzer across l.e.d. D1 and R7, and transposing the l.d.r. and preset VR1, a simple medicine cupboard alarm can be made. In this case TR3 will switch on when the ambient light level increases (i.e. when the cupboard door is opened) and switch off when it is dark.

The response delay can be removed if required by omitting capacitor C1.

CONSTRUCTION

The circuit may be built on a piece of stripboard measuring 14 holes by 7 strips as shown in Fig.34. Before assembling and soldering the components on the board, the tracks should be cut in the places indicated by means of a 2·5mm drill or the tool available for this purpose.

Take care to ensure that the transistors, l.e.d. and electrolytic capacitor C1 are inserted the correct way around. There is also one link required which can be made from a piece of discarded resistor lead.

It is also important to connect the buzzer (if used) correctly. These components often have the polarity indicated by the lead with red being positive. Note that a unit with an internal oscillator is required.

The l.d.r. (or thermistor) is not polarity sensitive and may be connected either way around.

The mains switching options **must NOT** be built on the stripboard but as a separate unit and connected to the control circuit by suitable leads. To ensure safety with the mains switching option, the complete circuit must be mounted in an earthed metal case with a suitable mains input plug and outlet socket for the lamp. A fuse and fuseholder should be included, rated to suit the lamp used.

Do not adjust the circuit with the mains connected or operate the unit with the box open. If the circuit is used to control a mains lamp, the l.e.d. will be superfluous but may be retained.

Setting up consists of adjusting preset VR1 so that the circuit switches at the required light level. This may be simulated by shielding the l.d.r. and adjusting VR1 accordingly and is best done before C1 is soldered into the circuit so that the unit responds immediately to changes in light levels. □

Back-To-Basics 5 – Mini Theremin/Twilight Switch

The only item that readers will experience problems finding for the *Mini Theremin*, one of this month's *Back-To-Basics* projects, is the specified Toko RD7 i.f. transformer, which is usually used in radio receivers.

Having had problems in the recent past trying to locate sources for Toko coils, it is fortuitous that the author (Raymond Haigh) of the new *Practical Radio Circuits* series has given us the names of two stockists. They are: **JAB Electronic Components, Dept *EPE*, PO Box 5774, Birmingham, B44 8JP** (☎ ***0121 682 7045*** or ***www.jabdog.com*** – they appear to only deal with mail orders) and **Sycom, Dept *EPE*, PO Box 148, Leatherhead, Surrey, KT22 9YW** (☎ ***01372 372587*** or ***www.sycomcomp.co.uk***). We also understand from Raymond that the main UK Toko supplier is **Coils-UK** (☎ ***01753 549502*** or ***www.coils-uk.com***), but that they are only into "bulk orders".

All the semiconductor devices for both of this month's projects should be widely stocked by our components advertisers. They should also carry the ORP12 light-dependent resistor or its derivative used in the concluding *Twilight Switch*.