DJ-580T/E

Service Manual

- Specifications ..... 2 ~ 3
- Circuit Description ..... 4 ~ 14
- Semiconductor Data ..... 15 ~ 22
- Exploded View ..... 23 ~ 28
- PC Board View ..... 29 ~ 38
- Parts List ..... 39 ~ 52
- Adjustment ..... 53 ~ 58
- Block Diagram ..... 59 ~ 60
- Circuit Diagram ..... 61 ~ 67

ALINCO ELECTRONICS INC.

Specifications

■ General

Channel Spacing:	5, 10, 12.5, 15, 20, 25 KHz steps
Memory Channels:	42 Channels (40 total combination of VHF and UHF)
	1 VHF Call Channel
	1 UHF Call Channel
Signal Type:	F3E(FM)
Antenna Impedance:	50Ω unbalanced
Microphone Impedance:	2kΩ unbalanced
Speaker Impedance:	8Ω unbalanced
Power Supply Requirements:	13.8 Volts DC (Rated 9 volts DC)
Dimensions (Radio Only):	140(H) x 58(W) x 33(D) mm
Weight:	Approximately 410g
DTMF:	16 Button Key Pad
Subaudible Tones:	Encode and Decode installed

■ U.S. Frequency Coverage

The frequency coverage listed as follows applies to DJ-580T.

VHF Band:	144.000 ~ 147.995MHz (TX)	
	130.000 ~ 173.995MHz (RX)	
	110.000 ~ 142.995MHz (RX)	Only after Modification
UHF Band:	440.000 ~ 449.995MHz (TX)	
	420.000 ~ 479.995MHz (RX)	

■ European Frequency Coverage

The frequency coverage listed as follows applies to DJ-580E.

VHF Band:	144.000 ~ 145.995MHz (TX/RX)
UHF Band:	430.000 ~ 439.995MHz (TX/RX)

■ Transmitter

Output Power:		Approximately 2Watts with Standard EBP-20N Battery
		Approximately 5Watts with Optional EBP-22N Battery
Modulation System:		Variable reactance FM
Max. Frequency Deviation:		+/- 5kHz
Spurious Emission:		Less than 60dB below carrier
Tone Frequency:		67.0 to 250.3Hz (38 selections)
		DJ-580T (Subaudible Encoding Tone)
		DJ-580E (1,750Hz Tone Burst)
Microphone:		Electret Condenser
Operating Mode:		
	Simplex:	
	Duplex:	5KHz steps minimum between 0 ~ 15.995MHz from receive frequency.
CTCSS Encoder:		Built-in and included as standard for DJ-580T
CTCSS Decoder:		Built-in and included as standard for DJ-580T

■ Receiver Specifications

Receiver System:	Superheterodyne, Dual Conversion
Sensitivity:	12dB SINAD less than -15dBμV
Intermediate Frequency:	VHF — 1st IF 55.05MHz 2nd IF 455kHz
	UHF — 1st IF 23.05MHz 2nd IF 455kHz
Audio Power Output:	250mW (at 10% T.H.D.)
Speaker Impedance:	8Ω

Circuit Description

1. Receiver System

VHF and UHF receiver systems are the double superheterodyne. In VHF receiver system, the first IF is 55.05 MHz and the second IF is 455KHz. In UHF receiver system,the first IF is 23.05 MHz and the second IF is 455KHz.

1.1 Front End

VHF:

The signal from the antenna is passed through a duplexer and an antenna switch, and then input to the RF coil L418.

The signal from L418 is amplified by Q416 and led to the band pass filter (L420, L421), and led to the first mixer base of Q417.

UHF:

The signal from the antenna is passed through a duplexer and an antenna switch, and then input to the RF coil L405.

The signal from L405 is amplified by Q404 and led to the band pass filter (L406, L407), passed through the band pass filter (L408, L409), and then led to the first mixer base of Q406.

1.2 First Mixer

VHF:

The signal (fo) is mixed with the first local oscillator signal (fo+55.05MHz) from the PLL circuit by the first-stage mixer Q417 and so is converted into the first IF signal.

The unwanted frequency band of the first IF signal is eliminated by the monolithic crystal filter (L423, L424, XF402).

UHF:

The signal (fo) is mixed with the first local oscillator signal (fo-23.05MHz) from the PLL circuit by the first-stage mixer Q406 and so is converted into the first IF signal.

The unwanted frequency band of the first IF signal is eliminated by the monolithic crystal filter (XF401).

1.3 IF Amplifier

VHF:

The first IF signal is amplified by Q418 and Q107, and input to pin 20 of IC102, where it is mixed with the second local oscillator signal (54.595MHz) and so is converted into the second IF signal (455KHz).

The second IF signal is output from pin4 of IC102, and unwanted frequency band of the second IF signal is eliminated by a ceramic filter (FL102), and input to pin6 of IC102.

The resulting signal is then amplified by the second IF limiting amplifier, and detected by quadrature circuit, and the audio signal is output from pin11 of IC102.

UHF:

The first IF signal is amplified by Q403 and Q101, and input to pin 20 of IC101, where it is mixed with the second local oscillator signal (22.595MHz) and so is converted into the second IF signal (455KHz).

The second IF signal is output from pin4 of IC101, and unwanted frequency band of the second IF signal is eliminated by a ceramic filter (FL101), and input to pin6 of IC101.

The resulting signal is then amplified by second IF limiting amplifier, and detected by quadrature circuit, and the audio signal is output from pin11 of IC101.

1.4 Audio Circuit

VHF:

The signal from pin 11 of IC102 is filtered with de-emphasis circuit (consists of R156, C153, R157, C154), and led to the mute circuit Q109, passed through the AF variable resister (VR102-B) and amplified by the power amplifier IC106 to drive the speaker.

UHF:

The signal from pin 11 of IC102 is filtered with de-emphasis circuit (consists of R124, C119, R125, C120), and led to the mute circuit Q103, passed through the AF variable resister (VR101-B) and amplified by the power amplifier IC106 to drive the speaker.

1.5 Squelch Circuit

VHF:

The audio signal from pin11 of IC102 is passed through the squelch control variable resistor (VR102-A) and input to pin13 of IC102. The audio signal is amplified by IC102 and output to pin14. The desired noise of the audio signal is eliminated by the high pass filter consisting of C147 and R166, and amplified by Q108. The resulting signal is rectified by D105 and then input to pin15 of IC102. When the voltage of pin15 is below 0.7V, SDV goes to "Lo". When the voltage of pin15 is over 0.7V, SDV goes to "Hi". The SDV signal is input to pin14 of IC107.

UHF:

The audio signal from pin11 of IC101 is passed through the squelch control variable resistor (VR101-A) and input to pin13 of IC101. The audio signal is amplified by IC101 and output to pin14. The desired noise of the audio signal is eliminated by the high pass filter consisting of C115 and R115, and amplified by Q102. The resulting signal is rectified by D101 and then input to pin15 of IC101. When the voltage of pin15 is below 0.7V, SDU goes to "Lo". When the voltage of pin15 is over 0.7V, SDU goes to "Hi". The SDU signal is input to pin15 of IC107.

1.6 S-meter Circuit

VHF:

The DC voltage of pin12 of IC102 is passed through VR104 and input to pin75 of IC107. The DC voltage is digitized to control the LCD S-meter display.

UHF:

The DC voltage of pin12 of C101 is passed through VR103 and input to pin74 of IC107. The DC voltage is digitized to control the LCD S-meter display.

1.7 AM , AGC Circuit

VHF:

AM audio signal from pin12 of IC102 is amplified by Q110, and supplied to pin 6 and pin7 of IC106. The S-meter signal from pin12 of IC102 is supplied to Q106. The gain of the second IF amplifier is controlled by the collector current of Q106, and the input level of pin 20 of IC102 is stabilized.

1.8 Cross Band Repeater Circuit

When the transceiver receives the VHF or UHF signal in the cross band repeater mode, it will be retransmitted from main band. The audio signal is passed through the cross band repeater switch Q105, and supplied to microphone amplifier IC105.

2. Transmitter System

2.1 Microphone Amplifier

VHF/UHF:

The voice from the internal or external microphone is led to pre-emphasis circuit, and then input to the microphone amplifier IC105, which consists of two operational amplifiers.

The output from the microphone amplifier is passed through variable resistors VR106 (VHF) and VR105 (UHF) for modulation adjustment to varicap diode of the VCO, controlling the VCO frequency.

2.2 Power amplifier

VHF:

The signal from VCO is amplified by a buffer amplifier Q420, and input to the power module pin1 of IC 402 . The amplified signal is output from pin5, and then passed through the low-pass filter and the antenna switch circuit. The unwanted harmonics frequency signal is eliminated by the low-pass filter in the duplexer and input to the antenna.

UHF:

The signal from VCO is amplified by a buffer amplifier Q408, and input to the power module pin1 of IC 401. The amplified signal is output from pin5, and then passed through the low-pass filter and the antenna switch circuit. The unwanted harmonics frequency signal is eliminated by the low-pass filter in the duplexer and input to the antenna.

2.3 Automatic Power Control Circuit

VHF:

The automatic power control(APC) circuit is used to obtain a stable transmission power. This circuit detects the transmission power by D409 in the low-pass filter consisting of L425, C514, C515, and C516. The detected DC voltage is supplied to APC circuit consisting of Q411, Q412, Q413, and D410. The detected voltage to Q411 is passed through Q412, Q413 and Q414, and then controls the emitter current of Q420.

UHF:

The automatic power control(APC) circuit is used to obtain a stable transmission power. This circuit detects the transmission power by D408 in the low-pass filter consisting of L403, C421, C422, and C450. The detected DC voltage is supplied to APC circuit consisting of Q411, Q412, Q413, and D410. The detected voltage to Q411 is passed through Q412, Q413 and Q414, and then controls the collector voltage of Q408.

3. PLL Circuit

VHF:

Output frequency of PLL circuit is set by the serial data from microprocessor IC107.
The data (strobe, clock, data) are consisted of 16 bits serial data. The VCO output frequency is supplied to pin10 of IC404. The programmable divider in IC404 divides the VCO output frequency, and generates 5 or 6.25KHz.
PLL circuit generates TX frequency (fo) and RX frequency (fo + 55.05MHz).

UHF:

Output frequency of PLL circuit is set by the serial data from microprocessor IC107.
The data (strobe, clock, data) are consisted of 16 bits serial data. The VCO output frequency is supplied to pin10 of IC403. The programmable divider in IC403 divides the VCO output frequency, and generates 5 or 6.25KHz.
PLL circuit generates TX frequency (fo) and RX frequency (fo − 23.05MHz).

3.1 Reference Divider Circuit

VHF:

The channel step is determined by the reference frequency.
6 channel steps (5, 10, 15, 12.5, 20, 25KHz) are obtained when the reference oscillation frequency (12.8MHz) is divided.
The reference frequency (5KHz) uses a channel step of 5, 10, 15, 20 or 25KHz.
The reference frequency (6.25KHz) uses the channel step of 12.5KHz. The frequencies multiplied by the even numbers of 12.5KHz use the reference frequency of 5KHz.

UHF:

The channel step is determined by reference frequency.
6 channel steps (5, 10, 15, 12.5, 20, 25KHz) are obtained when reference oscillation frequency (12.8MHz) is divided.
The reference frequency (5KHz) uses a channel step of 5, 10, 15, 20 or 25KHz.
The reference frequency (6.25KHz) uses the channel step of 12.5KHz. The frequencies multiplied by the even numbers of 12.5KHz use the reference frequency of 5KHz.

3.2 Phase Comparison Circuit (P/C)

VHF:

A comparison frequency is obtained when the VCO output is divided in IC404 (pulse swallow system-based PLL IC).

UHF:

A comparison frequency is obtained when the VCO output is divided in IC403 (pulse swallow system-based PLL IC).

3.3 PLL Loop Filter Circuit

VHF:

The pulse wave output of charge pump is converted to DC voltage by PLL loop filter circuit, and supplied to D423, D424 of varicap diode in VCO unit.

UHF:

The pulse wave output of charge pump is converted to DC voltage by PLL loop filter circuit, and supplied to D421, D422 of varicap diode in VCO unit.

3.4 VCO Circuit

VHF:

The VCO tune voltage is applied to the varicaps D423 and D424.
The frequency modulation is executed when the audio signal voltage is supplied to the varicaps D424 and D425.

UHF:

The VCO tune voltage is applied to the varicaps D421 and D422.
The frequency modulation is executed when the audio signal voltage is supplied to the varicap D418.

4. DTMF Circuit

4.1 Decoder

The detected signal from pin11 of IC101 and IC102 is passed through VHF/UHF selector consisting of Q142 and Q111, and input to the DTMF decoder pin8 of IC108. The VHF/UHF selector is controlled by BND from pin42 of IC107. When the input signal is valid, the digital signal is output from pin1(D2), pin2(D1), pin15(D8) and pin16(D4) of IC108, and then input to pin48(DD2), pin47(DD1), pin50(DD8) and pin49(DD4) of IC107.

4.2 Encoder

The DTMF signal corresponding to the combination of the column and row is output from tone output pin17 of IC3. When using the DTMF keypad, IC107 pin31(IN0), pin32(IN1), pin33(IN2), pin34(IN3) and pin51(OT0), pin52(OT1), pin53(OT2), pin54(OT3) go to high impedance.
There are pull-up register(ROW) and pull-down register(COL) inside IC3. When the keyboard is pressed, ROW input and COL input are connected, and the input voltage goes to half level, then the DTMF is output.
When the DTMF encoder is controlled by IC107, one of IN0, IN1, IN2 and IN3 goes to "High", and one of OT0, OT1, OT2 and OT3 goes to "Low". The DTMF signal is output corresponding to the input data.

5. Tone Squelch Circuit

5.1 Decoder

VHF/UHF:

The second IF signal from pin11 of IC101 and IC102, is passed through VHF/UHF selector consisting of Q142 and Q111, and input to the tone squelch decoder pin24 of IC701. The VHF/UHF selector is controlled by BND from pin42 of IC107.
When the tone squelch decoder IC701 decodes the input tone signal frequency as the programmed frequency, pin13 goes to "Low". The signal is input to pin16(DET) of IC107, and the squelch goes off.
When the Tone squelch decoder IC701 does not decode the input tone signal frequency as the programmed frequency, pin13 goes to "High". The signal is input to pin16(DET) of IC107, and the squelch goes on.

5.2 Encoder

VHF:

The tone signal is output from pin16 of IC701, and amplified at Q701, then output to the TO(MOV) terminal.

UHF:

The tone signal is output from pin16 of IC701, and amplified at Q701, then output to the TO(MOU) terminal.

6. 1750Hz Tone Burst Circuit

The 1750Hz Tone Burst signal is generated by IC107.
The signal is passed through the VR111, and supplied to MOV, MOU terminal.
※Tone Burst Circuit is built in DJ-580E only.

7. Reset Circuit

7.1 Reset Circuit Diagram

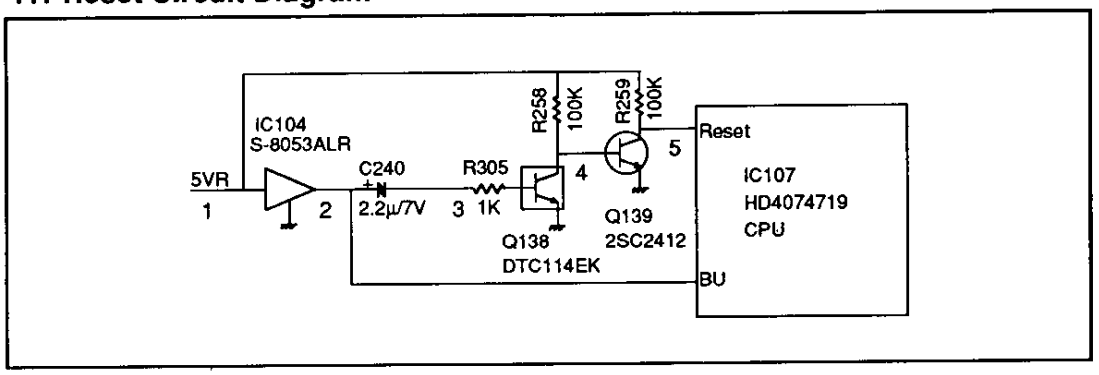

7.2 Reset Circuit

A pulse of duration about 50ms is output from reset circuits when power is turned on. Microprocessor IC107 is then reset.
Voltage detector circuit IC104 detects a decrease in the 5VR line when power is turned off.
BU is changed from "High" to "Low" ,the microprocessor IC107 enters backup state.

7.3 Timing Chart

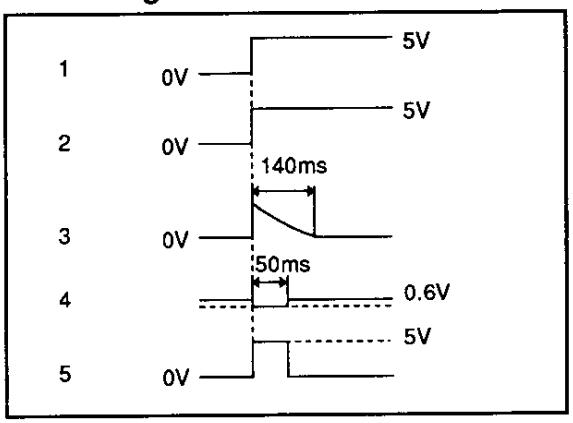

8. LVI Circuit

8.1 LVI Circuit Diagram

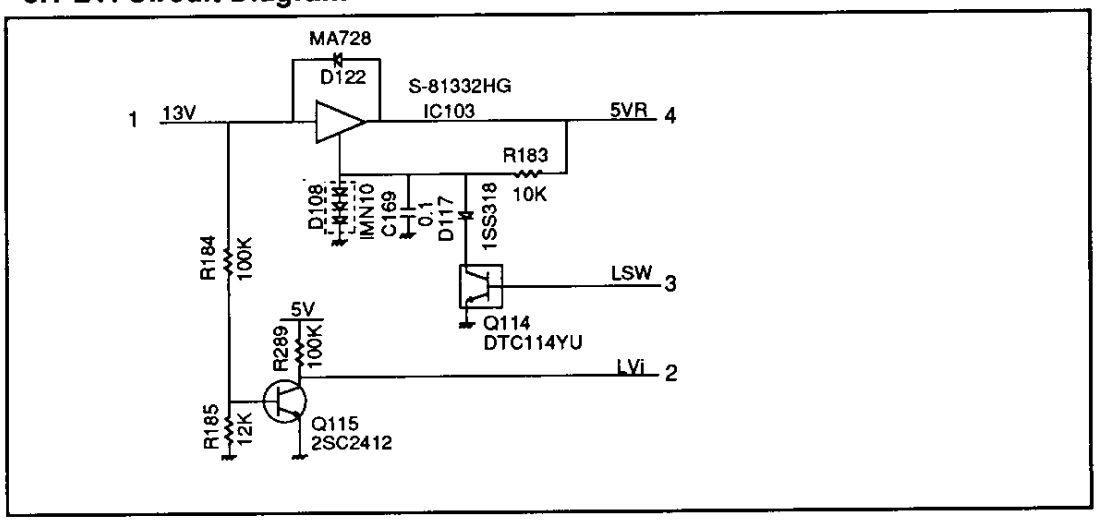

8.2 LVI circuit

The 5VR is obtained by the stabilized power supply circuit IC103.
Voltage detector circuit Q115 detects a decrease in the 13V line when LVi output is changed from "Low" to "High".
Then LSW output in the microprocessor IC107 is changed from "High" to "Low".
LVi switch Q114 is turned on.
And then 5VR voltage is changed 5V to 3.8V.

8.3 Timing Chart

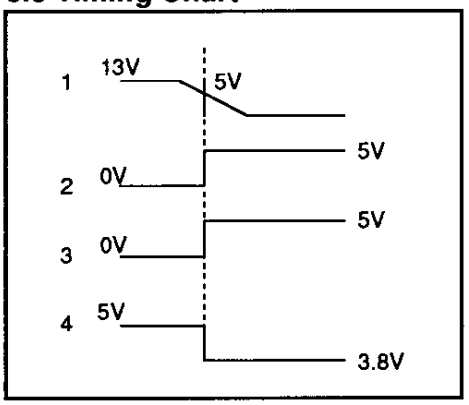

9. Jack Circuit

Circuit Diagram

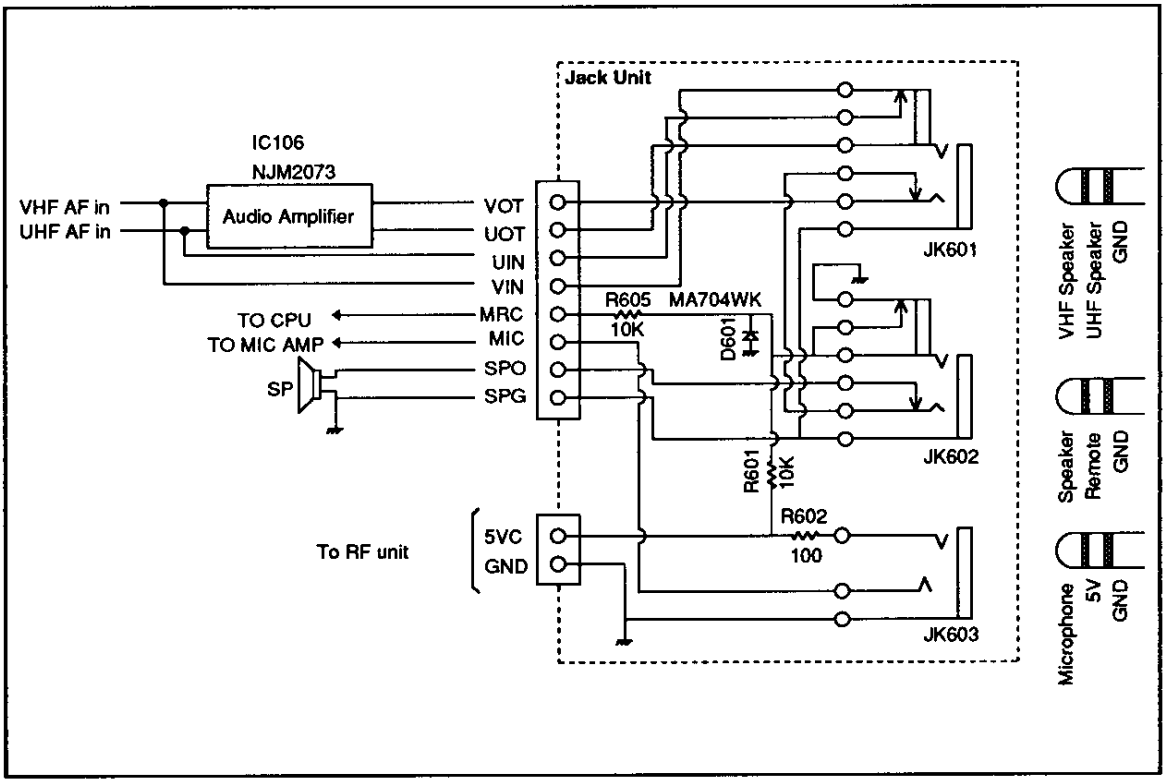

10. Signal Sequence Diagram

10.1 Block Diagram

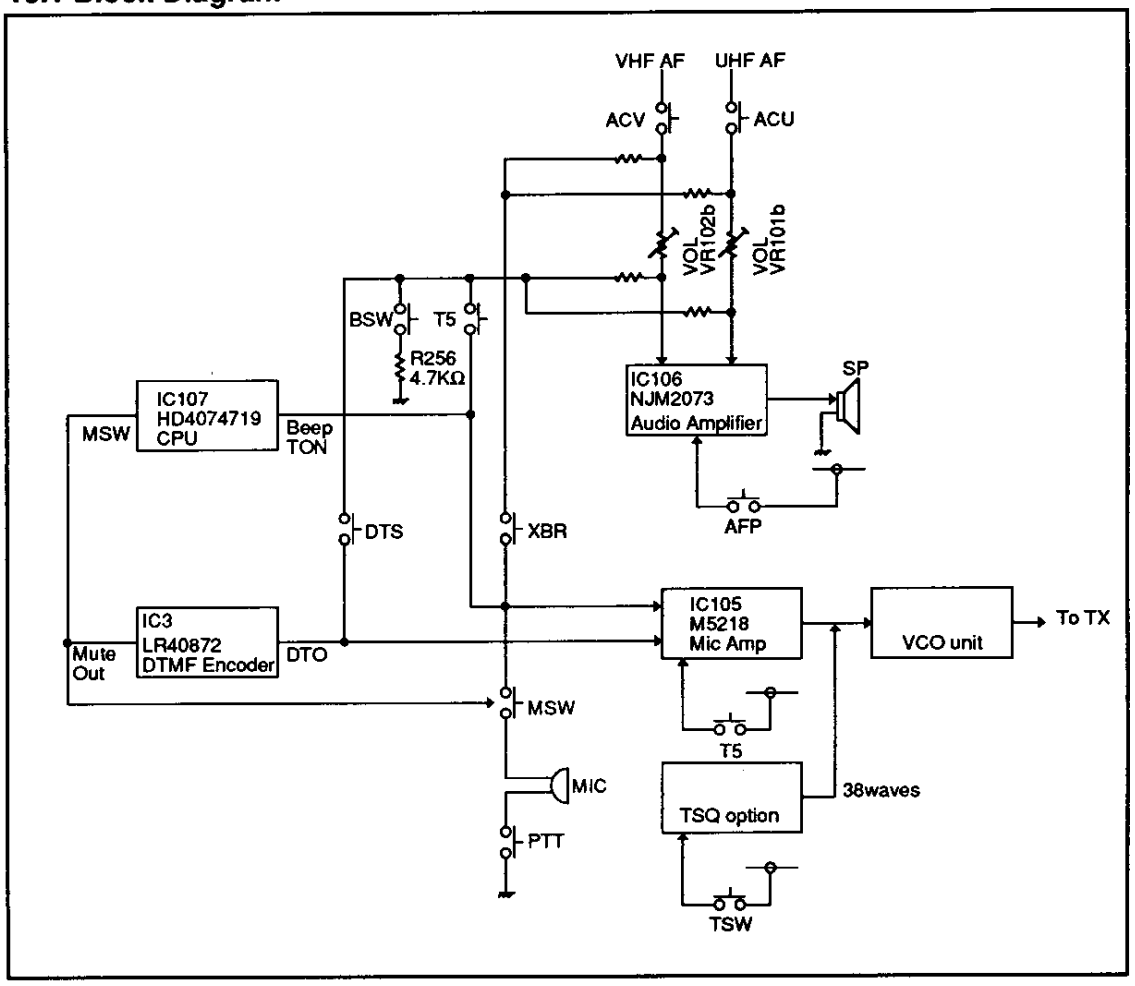

10.2 Function Table

	BEEP	88.5Hz	DTMF	1750Hz
BSW	OFF: loud ON : samll	OFF	—	—
XBR	OFF	—	OFF	OFF
DTS	—	—	ON : Trasmitting	OFF
AFP	ON	Depends on Sub SQL	ON	Depends on Sub SQL
T5	OFF	ON	ON	ON

11. Terminal Function of Microprocessor

11.1 Function Table

Name	I/O	Description	Pin No.	Pin name	H	L
UL	I	Unlock detection signal input	1	RD3/AN7	unlocked	locked
			2	AGND		
	I		3	Reset		
			7	CL1		
			8	CL2		
			9	$\overline{\text{TEST}}$		
LCLK	O	LCD driver clock output	11	D0		usually set to Low
PTT	I	PTT switch input	12	D1	ON	OFF
LDAT	O	LCD driver data output	13	D2		usually set to Low
SDV	I	Signal detection input (VHF)	14	D3	detected	no signal
SDU	I	Signal detection input (UHF)	15	D4	detected	no signal
DET	I	Tone detection input	16	D5	undetected	detected
DDV	I	DTMF data valid input	17	D6	valid	invalid
CLK	O	PLL & CTCSS serial clock	18	D7		usually set to Low
AFPC	O	AF power amplifier on/off switch	19	D8	ON	OFF
ACV	O	Voice on/off switch (VHF)	20	D9	ON	OFF
ACU	O	Voice on/off switch (UHF)	21	D10	ON	OFF
BSW	O	Beep volume selector	22	D11	small	loud
DSW	O	DTMF IC power supply on/off switch	23	D12	ON	OFF
LSW	O	Battery low mode switch	24	D13	battery low	normal
MSW	O	Microphone on/off switch	25	D14	OFF	ON
DAT	O	PLL & CTCSS serial data output	26	D15		usually set to Low
SBV	O	PLL IC strobe (VHF)	27	R00		
SBU	O	PLL IC strobe (UHF)	28	R01		
SBT	O	CTCSS IC strobe	29	R02		
	I	[illegible]	30	R03		
IN0	I	Key matrix input 0	31	R10		
IN1	I	Key matrix input 1	32	R11		
IN2	I	Key matrix input 2	33	R12		
IN3	I	Key matrix input 3	34	R13		
CSV	O	LCD driver chip selection output (VHF)	35	R20		
CSU	O	LCD driver chip selection output (UHF)	36	R21		

Name	I/O	Description	Pin No.	Pin name	H	L
CDL	O	LCD driver command data	37	R22	command	data
TSW	O	Tone IC power supply on/off switch	38	R23	ON	OFF
34R	O	340MHz band RX on/off switch	39	R30	ON	OFF
87R	O	870MHz band RX on/off switch	40	R31	ON	OFF
ABU	O	UHF band on/off switch	41	R32	ON	OFF
BND	O	TONE/DTMF band selector	42	R33	VHF	UHF
ABV	O	UHF band on/off switch	43	R40	ON	OFF
AIR	O	Air band on/off switch	44	R41	air band	except air band
DTS	O	Mute signal during DTMF transmission	45	R42	normal	during DTMF transmission
CALL	I	Call key input	46	R43	OFF	ON
DD1	I	DTMF decord data input 1	47	R50/Vdisp	1	ø
DD2	I	DTMF decord data input 2	48	R51	1	ø
DD4	I	DTMF decord data input 4	49	R52	1	ø
DD8	I	DTMF decord data input 8	50	R53	1	ø
OT0	O	Key matrix output 0	51	R60/COMP	RX:H TX:Hi Z	
OT1	O	Key matrix output 1	52	R61/Vref		
OT2	O	Key matrix output 2	53	R62/TOE1		
OT3	O	Key matrix output 3	54	R63/TOE2		
BU	I	Backup mode input VCC < 3.2V: L	55	R70/$\overline{INT0}$	normal	backup mode
OT4	O	Key matrix output & band plan	56	R71/$\overline{INT1}$	RX:H TX:Hi Z	
$\overline{5VC}$	O	+5V on/off	57	R72/$\overline{INT2}$	Hi Z OFF	ON
XBR	O	Cross band repeater on/off switch	30	R73/$\overline{INT3}$	OFF	ON
$\overline{T5V}$	O	TX5V on/off (VHF)	59	R80/$\overline{INT4}$	Hi Z OFF	ON
$\overline{T5U}$	O	TX5V on/off (UHF)	60	R81/$\overline{INT5}$	Hi Z OFF	ON
MPS	O	Middle power switch	61	R82/S01	high, low	middle power
HPS	O	High power switch	62	R83/S11	low, middle	high power
SQL	I	Squelch key input	63	R90/$\overline{SCK1}$	OFF	ON
SCAN	I	Scan key input	64	R91/$\overline{SCK2}$	OFF	ON
LBSY	I	LCD busy input	65	R92/S12	inhibited	permitted
TBST	I	Tone burst key input (DJ580E/ED)	66	R93/S02	OFF	ON
RE1	I	Rotary encoder input	67	RA0/ICT0		

Name	I/O	Description	Pin No.	Pin name	H	L
RE2	I	Rotary encoder input	68	RA1/ICT1		
BEP TON	O	Beep output Tone output (88.5 Hz only)	69	RA2/T0G		
$\overline{LMP}$	O	Lamp on/off switch	70	RA3/BUZZ	Hi Z OFF	ON
$\overline{PVV}$	O	PLL power supply on/off (VHF)	71	RB0/T0C	Hi Z OFF	ON
$\overline{PVU}$	O	PLL power supply on/off (UHF)	72	RB1/T0D	Hi Z OFF	ON
SMU	I	S-meter (UHF)	74	RC0/AN0		
SMV	I	S-meter (VHF)	75	RC1/AN1		
MRC	I	Microphone remote control	76	RC2/AN2		
TICD	I	Tone squelch unit	77	RC3/AN3	nothing	equipped
FNC	I	Function key input	78	RD0/AN4	OFF	ON
LMPK	I	Lamp key input	79	RD1/AN5	OFF	ON
LVI	I	Low voltage input	80	RD2/AN6	Low voltage	normal

11.2 Terminal Connection of Microprocessor

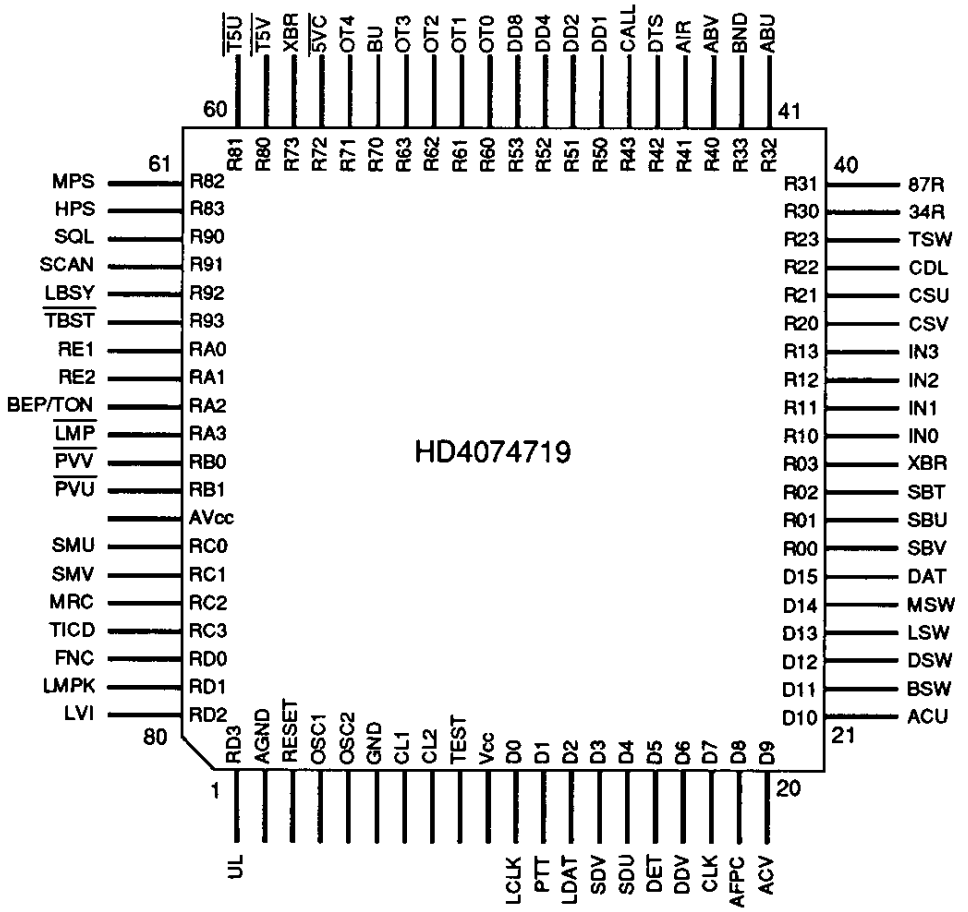

Semiconductor Data

1) FX365 (XA0108)

CTCSS Encoder/Decoder

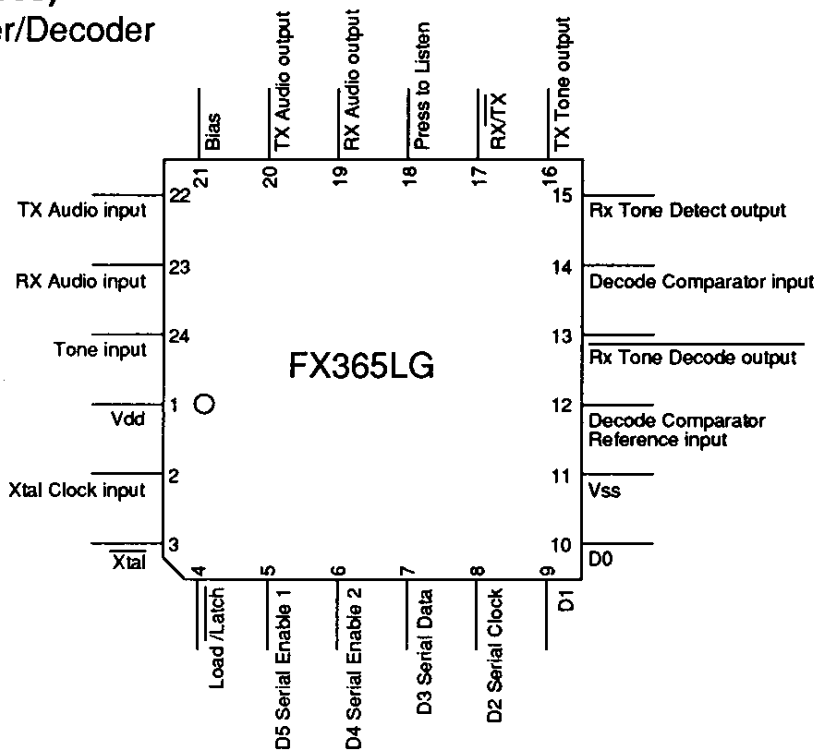

Decode comparator Input: This is the inverting input of the decode comparator. This pin is to be connected to the Rx TONE DETECT pin via an external integrator.

Rx Tone Detect (O/P): In Rx mode this pin will go to logic '1' during a successful decode. This pin is normally connected to the Decode Comparator input via the external integrator circuitry.

Tx Tone O/P: A low impedance emitter follower stage for sourcing the CTCSS sinewave under the control of the Rx/Tx pin. This O/P when not transmitting a tone may be biased to VDD/2 - 0.7V or O/C .

Rx/Tx: This input (in parallel mode) selects Rx or Tx modes . In serial mode this function is serially loaded. This pin is internally pulled to VDD via a 1 MΩ resistor.

PTL: In parallel Rx mode this pin operates as a 'press to listen' function by enabling the Rx audio path thus overriding the tone squelch function. In parallel Tx mode this pin reverses the phase of the transmitted CTCSS tone (squelch tail elimination). In serial mode this function is serially loaded . The phase reversal function should be applied by timing circuit to ensure correct system operation.

Rx Audio Out: This is the high pass filtered "Receive" audio output pin. This pin outputs audio when Rx TONE DECODE = 0, or PTL = 1 or NO TONE is programmed. In Tx mode this pin is biased to VDD/2.

Tx Audio Out: This is the high pass filtered "Transmit" audio output pin. In Tx mode this pin outputs audio present at the 'Tx AUDIO INPUT pin. In Rx mode this pin is biased to VDD/2.

Bias: This pin is the output of an internally generated VDD/2 bias level and would normally be externally decoupled to Vss via C6.

Tx Audio I/P: This is the Tx Audio input pin. In Tx mode audio may be prefiltered, using the Tx audio path, thus helping to avoid talk off due to intermodulation of speech frequencies with the transmitted CTCSS tone. The Tx audio path may also be used to prefiltered speech when using scramblers which introduce noise in the low frequency band. This pin is internally biased to VDD/2.

Rx Audio Input: This is the input to the audio high pass filter in Rx mode. This pin is internally biased to VDD/2.

Tone Input: This is the input to the CTCSS tone detector and is internally biased to VDD/2.

2) LR40872 (XA0042)

Tone Dialer

Test Circuit

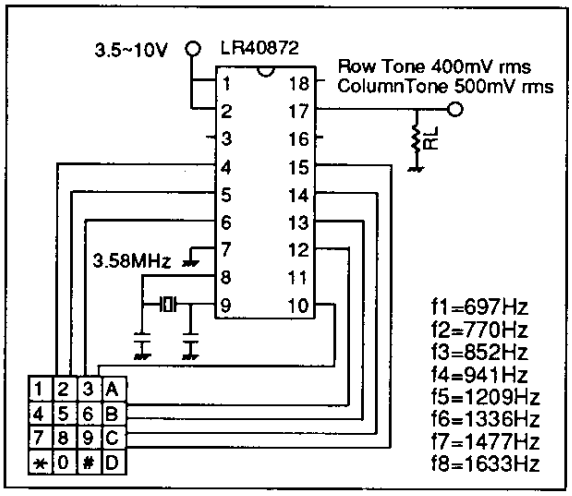

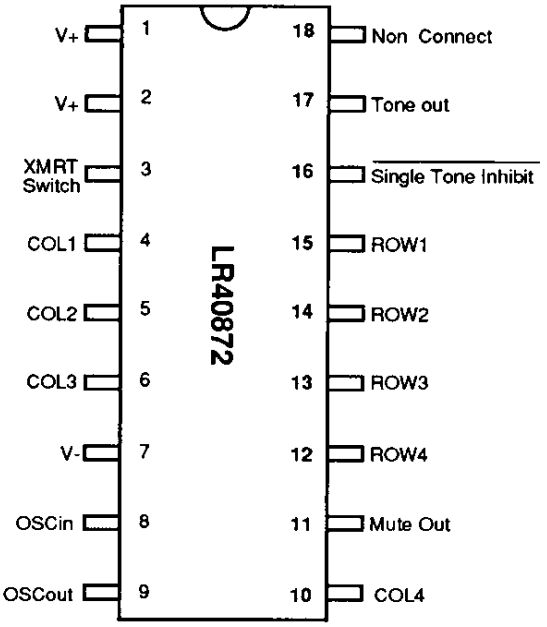

3) M5218FP (XA0006)

Dual Low Noise
Operational Amplifiers

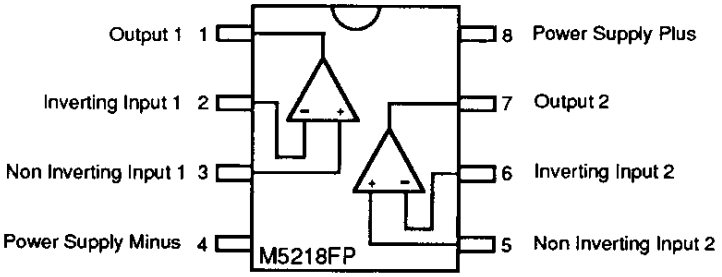

4) M67748L (XA0148)

135 ~ 150MHz 7W
RF Power Module

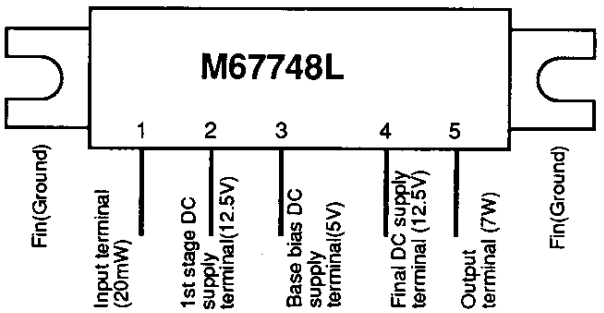

5) M67749M (XA0143)

430 ~ 450MHz 7W
RF Power Module

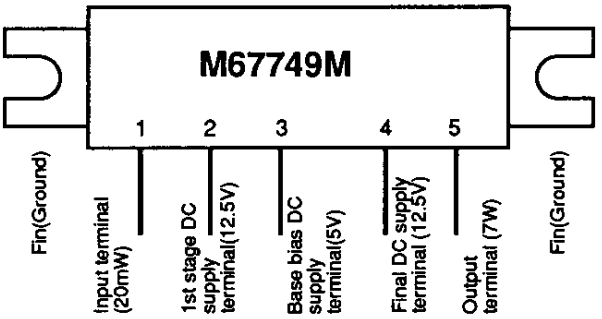

6) MB1511PFV (XA0173)

Frequency Synthesizer

Function Table

FC input	P.D.input	Do output
High or Low	fr=fp	Hi Z
High	fr>fp	High
High	fr<fp	Low
Low	fr>fp	Low
Low	fr<fp	High

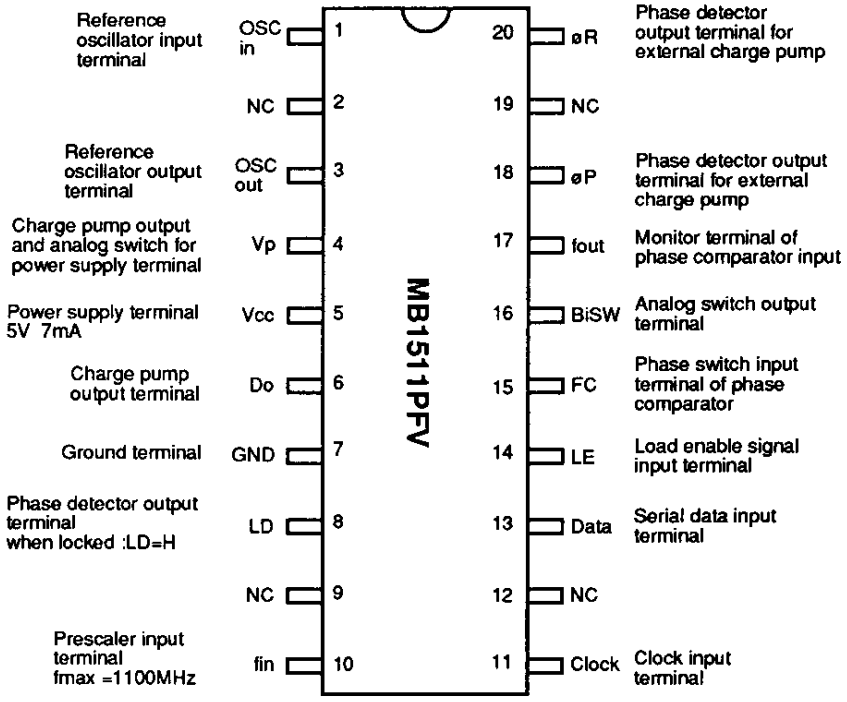

7) MC145436DWR (XA0105)

DTMF Receiver

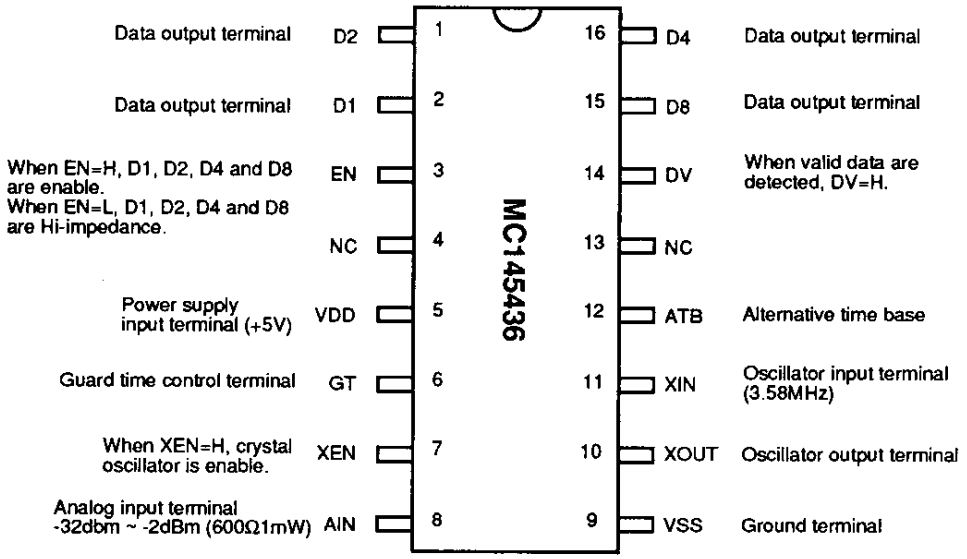

Equivalent Circuit

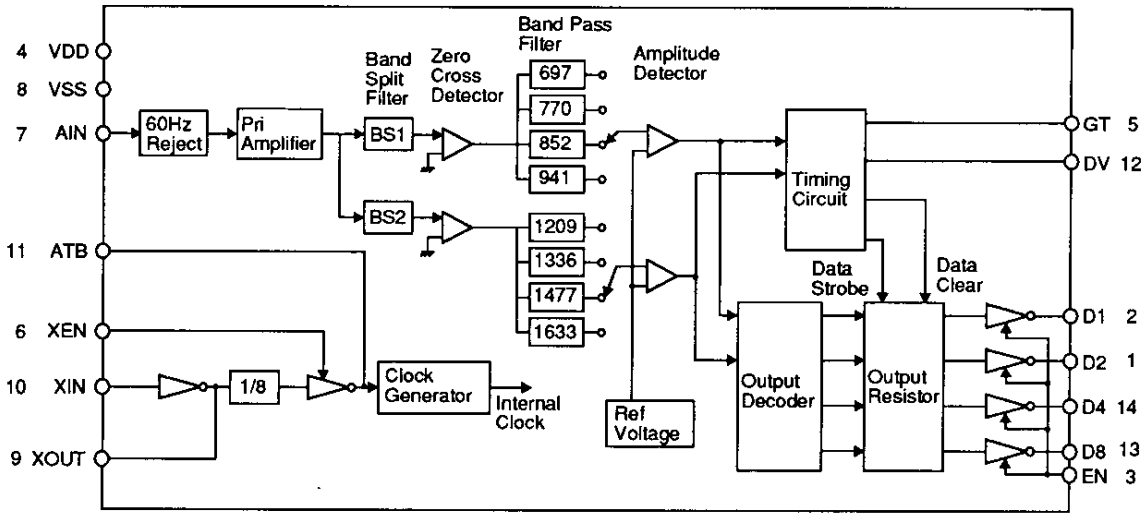

8) NJM2073M (XA0111)

Dual Power Amplifiers

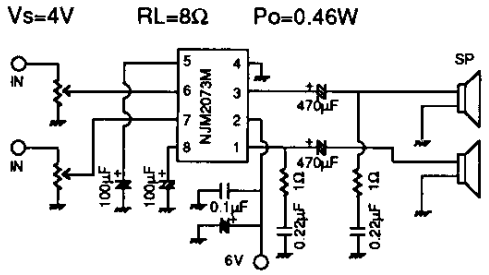

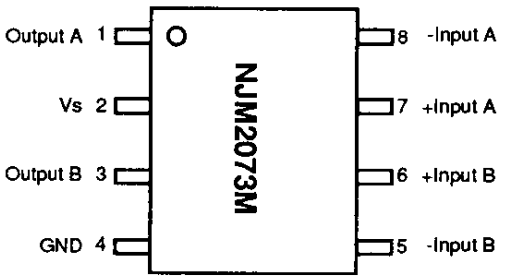

9) S-8053ALR (XA0172)

C-MOS Voltage Detector

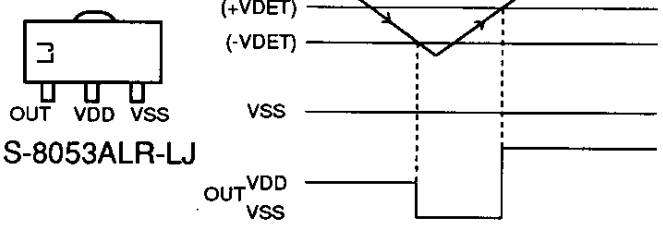

Equivalent Circuit

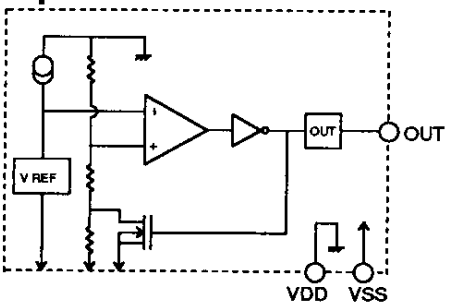

10) S-81332HG (XA0182)

Voltage Regulator

V out=3.200V
I out=30mA
V in=15V
Iss=16μA

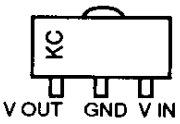

S-81332HG-KC

Equivalent Circuit

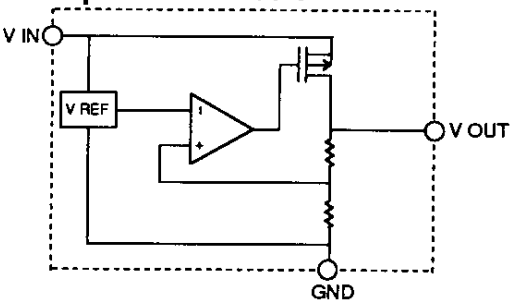

11) TK10487MTR (XA0144)

Narrow Band FM IF IC

Vcc=3V
F=10.7MHz
Icc 5mA
Limit 2μV -3dB
Vo 180mV Dev=3KHz
THD 1.0%

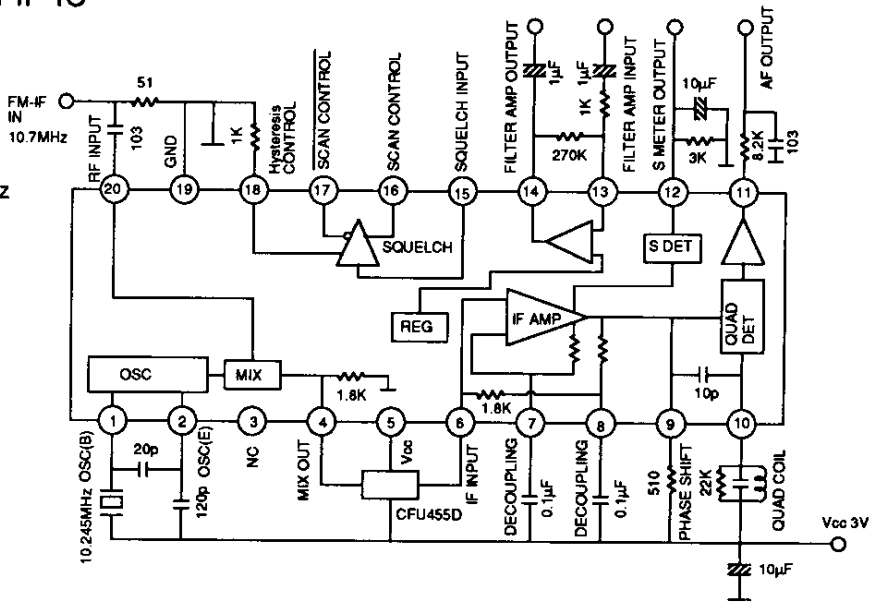

12) μPD7225GB (XA0141)

LCD Driver

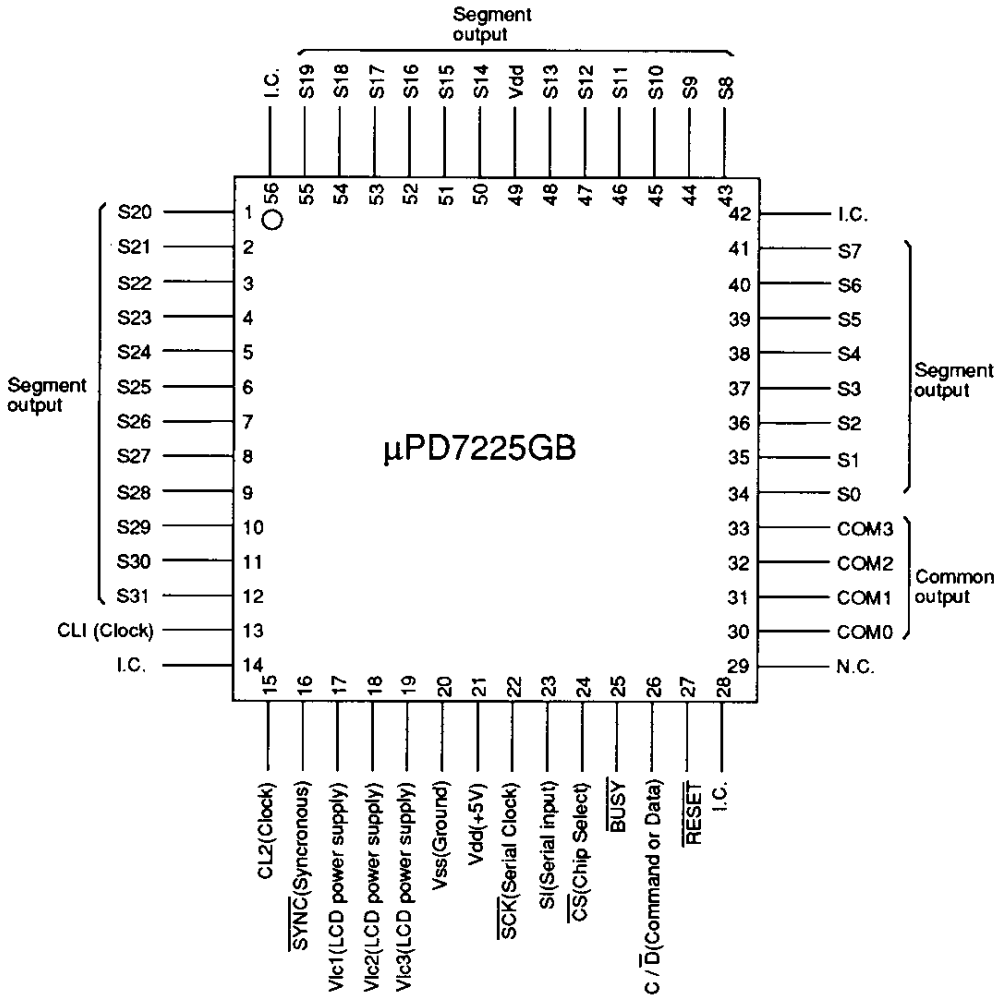

13) Transistor, Diode, and LED Outline Drawings

2SA1037	2SA1213	2SC2412	2SC2714	2SC3356	2SC3429	2SC4081	2SC4099
XT0038	XT0088	XT0037	XT0081	XT0030	XT0035	XT0095	XT0096
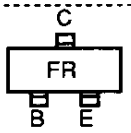	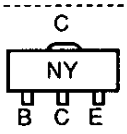	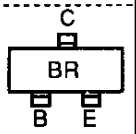	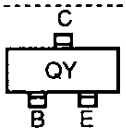	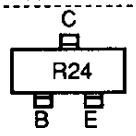	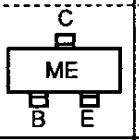	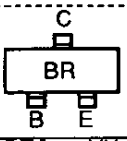	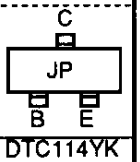
2SC4393	2SK302	2SK508	2SJ144	DTA114YK	DTA143XU	DTC114YU	DTC114YK
XT0097	XE0015	XE0010	XE0019	XU0019	XU0032	XU0029	XU0002
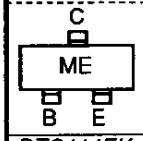	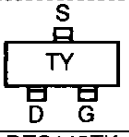	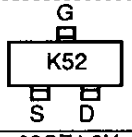	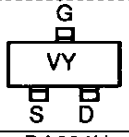	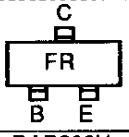	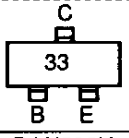	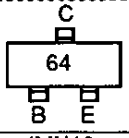	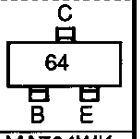
DTC114EK	DTC143TK	02CZ4.3Y	DA204U	DAP202U	DAN202U	IMN10	MA704WK
XU0012	XU0001	XD0113	XD0130	XD0231	XD0230	XD0091	XD0120
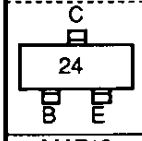	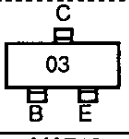	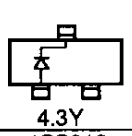	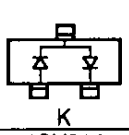	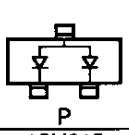	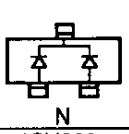	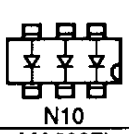	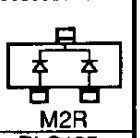
MA713	MA716	1SS318	1SV214	1SV215	1SV229	MA8027L	RLS135
XD0128	XD0118	XD0129	XD0131	XD0132	XD0133	XD0232	XD0066
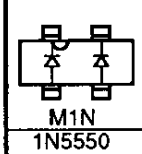	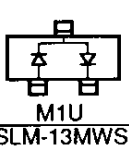	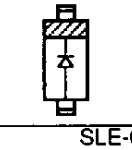	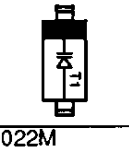	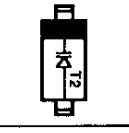	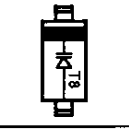	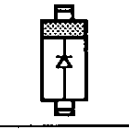	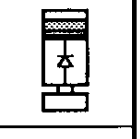
1N5550	SLM-13MWS	SLE-0022M					
XD0110	XL0016	XL0025					
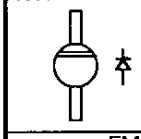	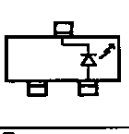	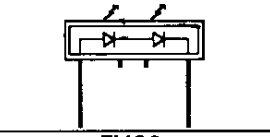					
FMA7		FMC2		FMG2		FMS1	
XU0027		XU0028		XU0026		XT0070	
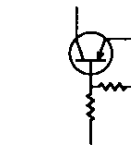		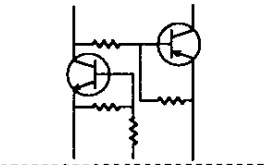		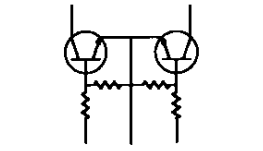		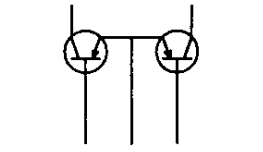	
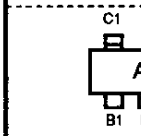		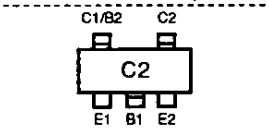		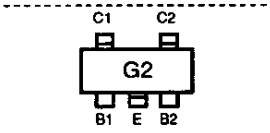		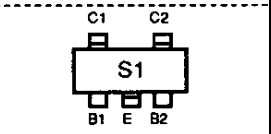	
FMW1		TC4S69F					
XU0020		XA0137					
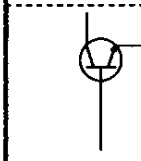		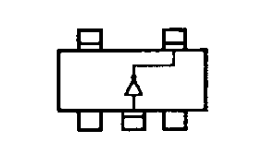					
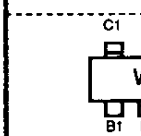		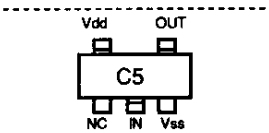					

14) LCD Connection

SEGMENT

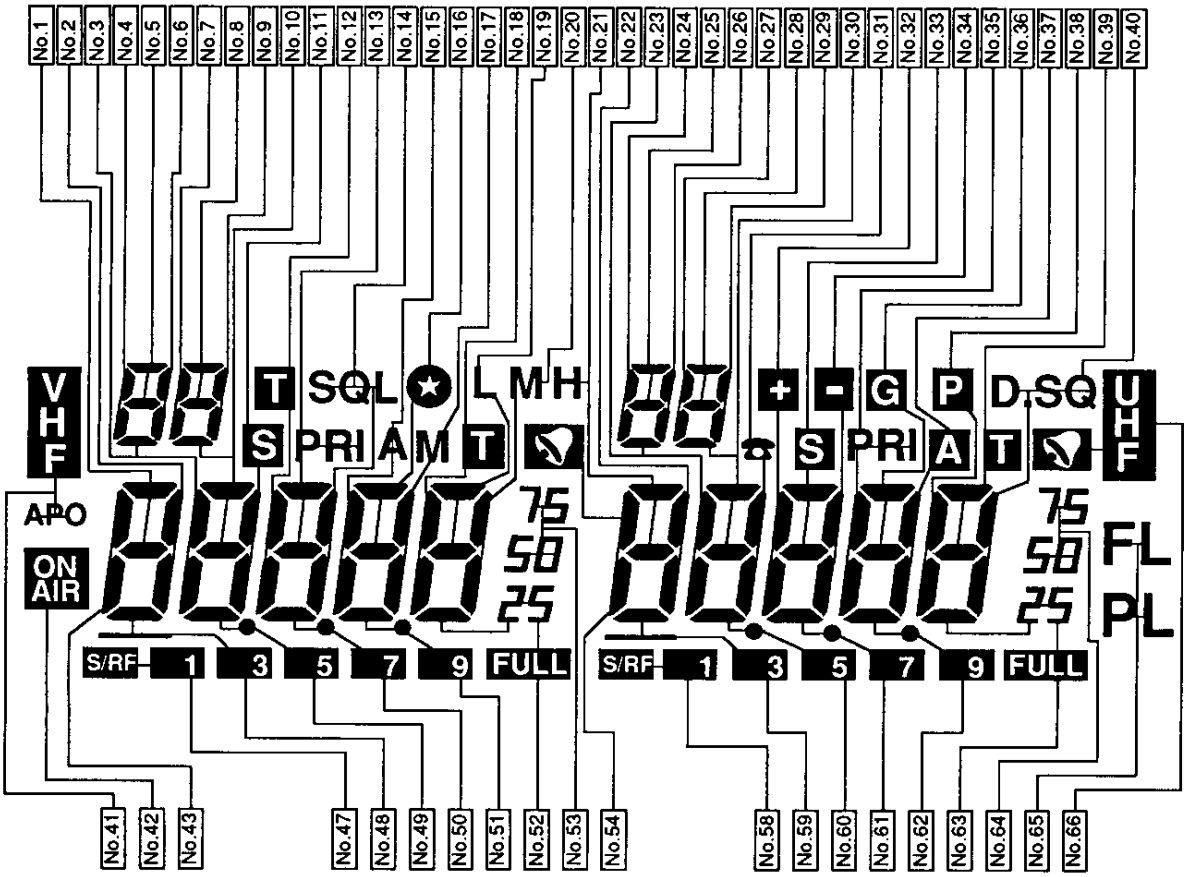

COMMON

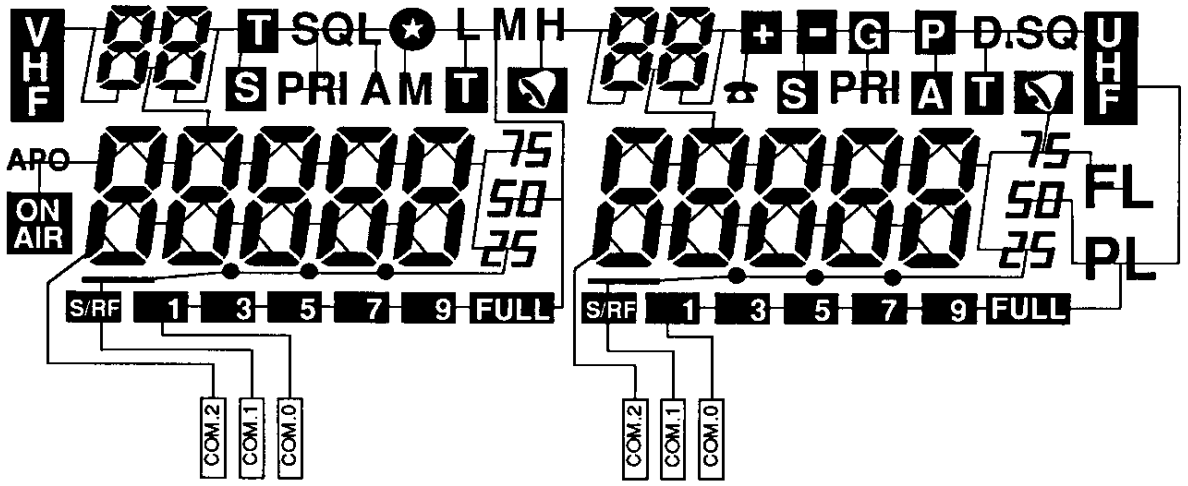

Exploded View

1) Key pad

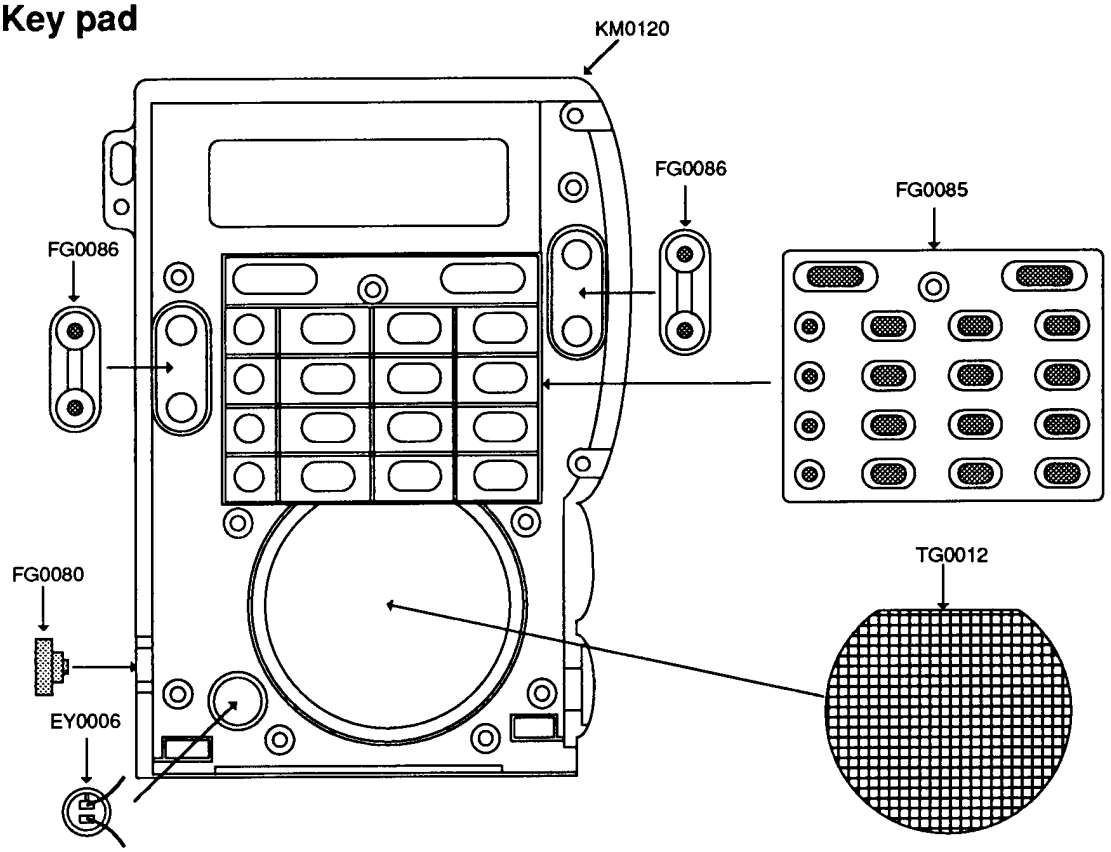

2) Speaker

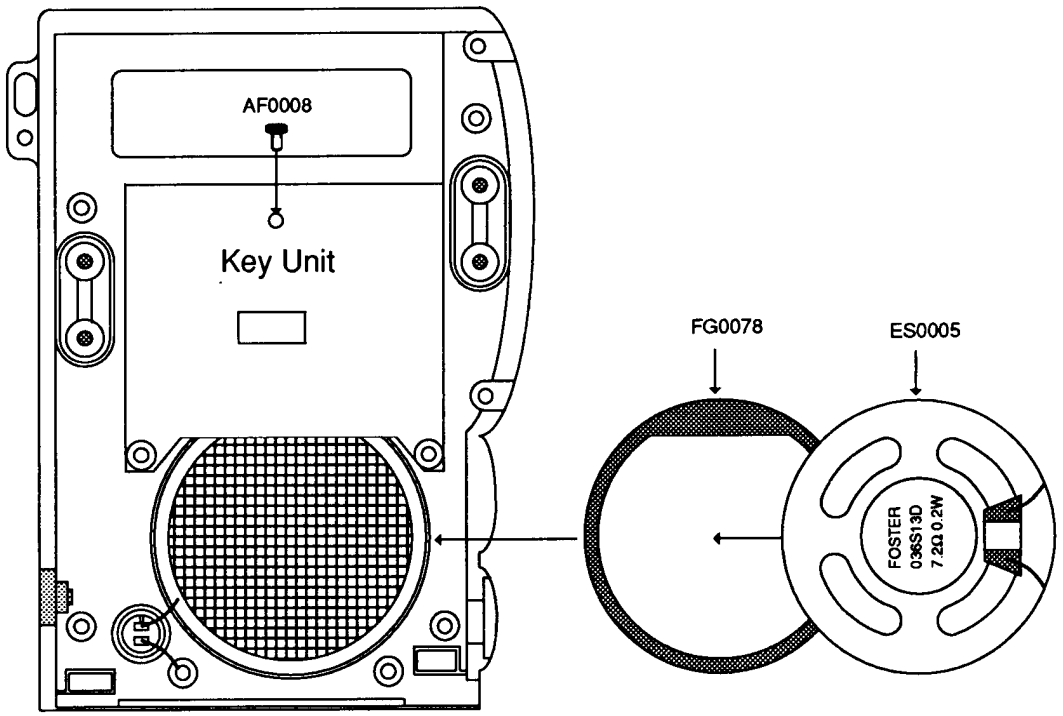

3) Key Unit

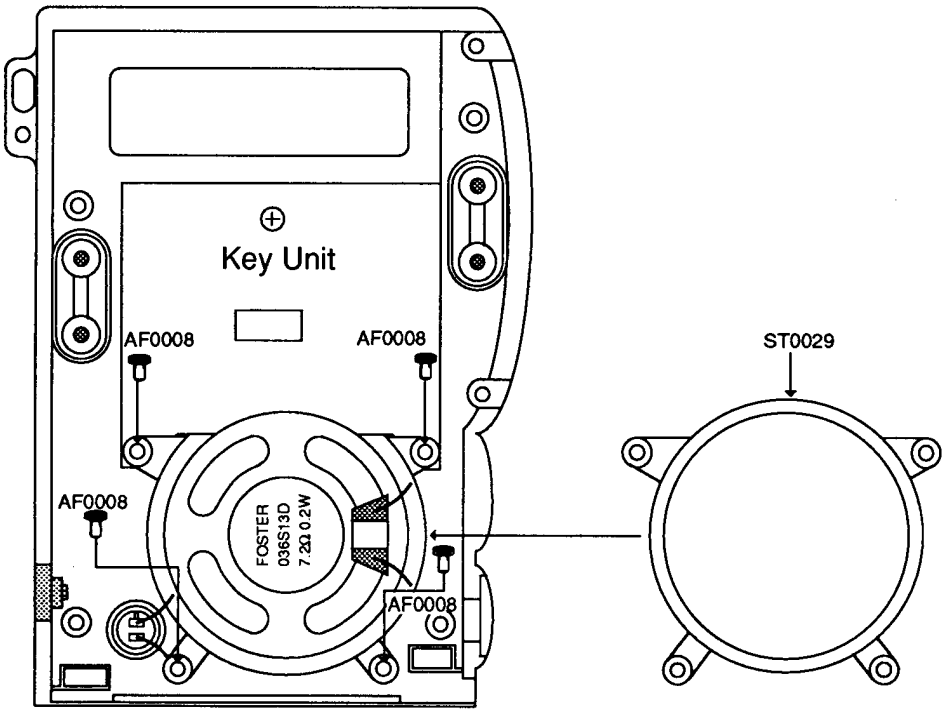

4) LCD Unit

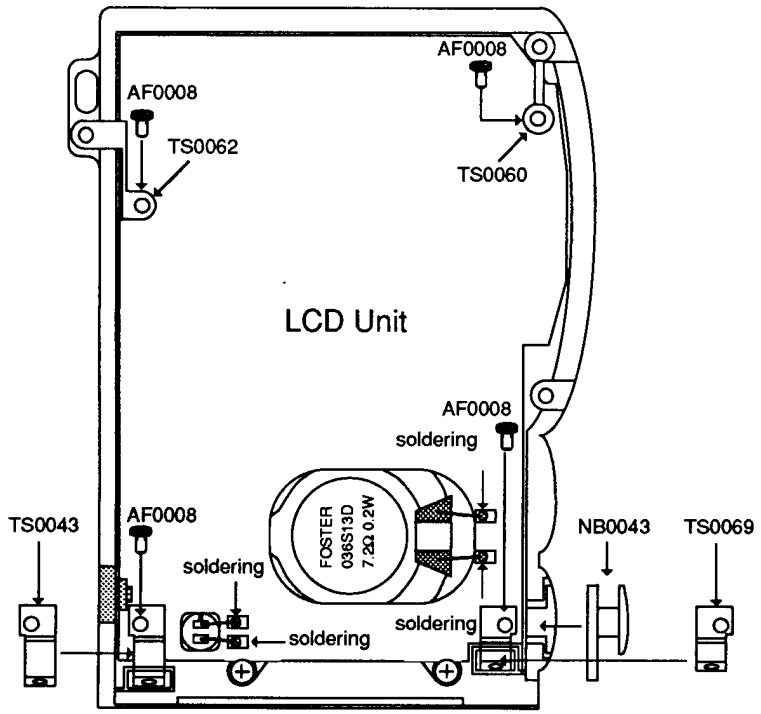

5) Battery Terminal

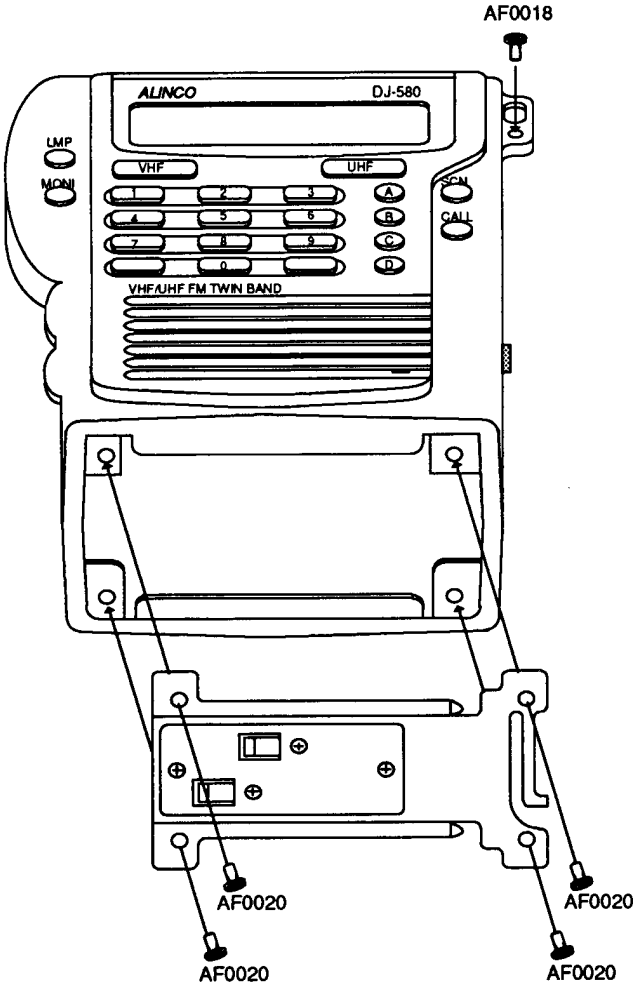

6) LCD Panel

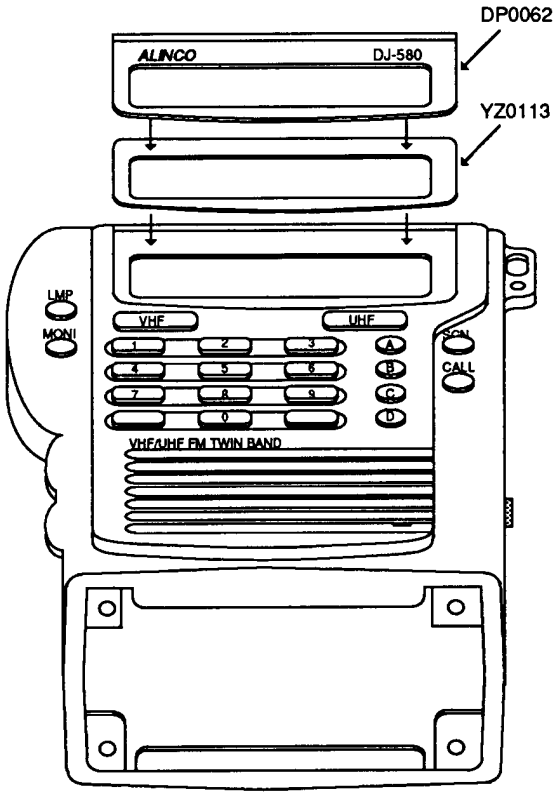

7) Battery Terminal Assembly

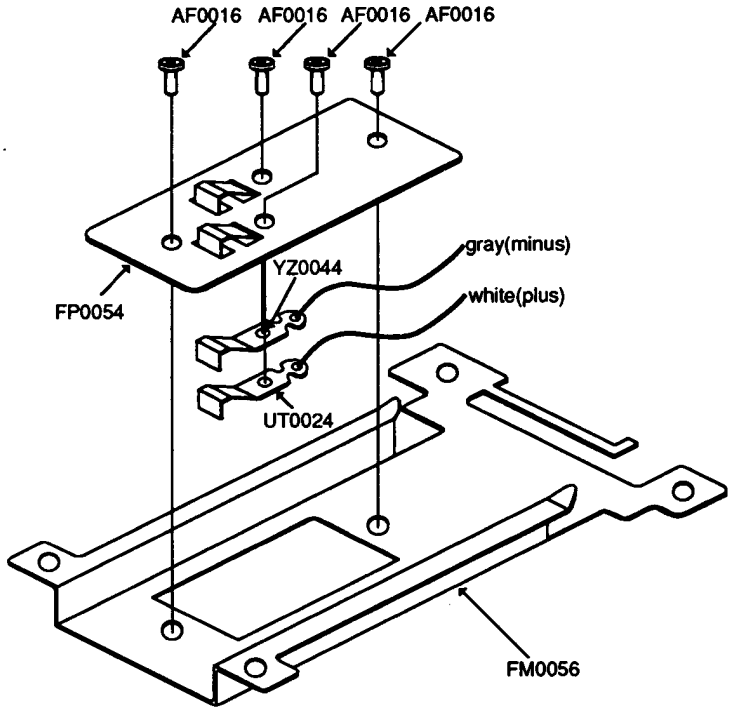

8) BNC Receptacle

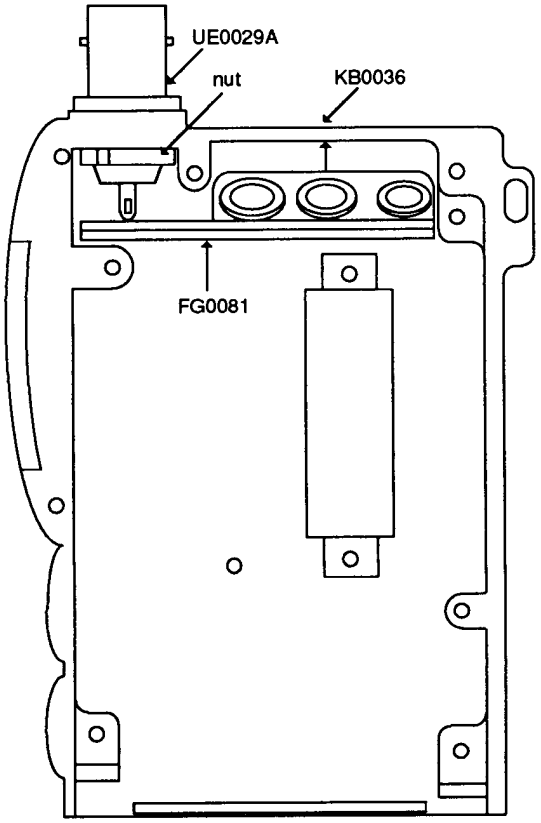

9) RF Unit

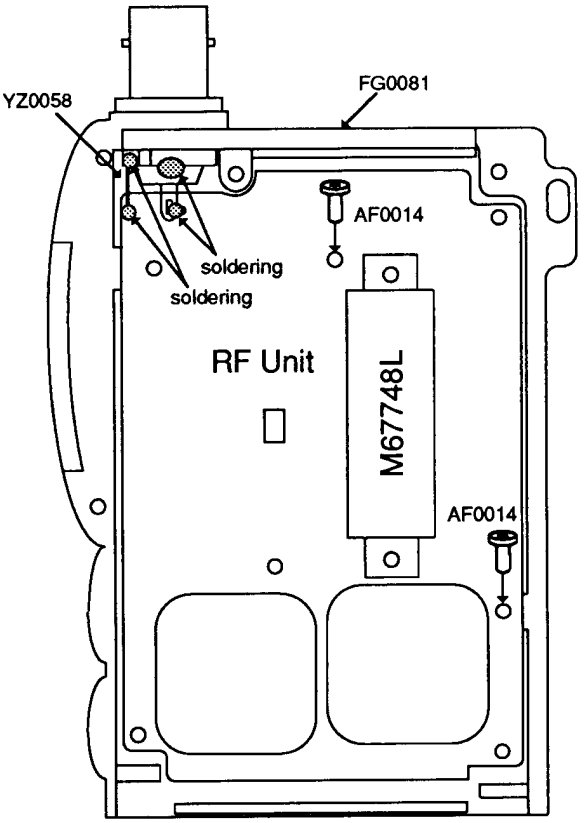

10) IF Shielding Plate

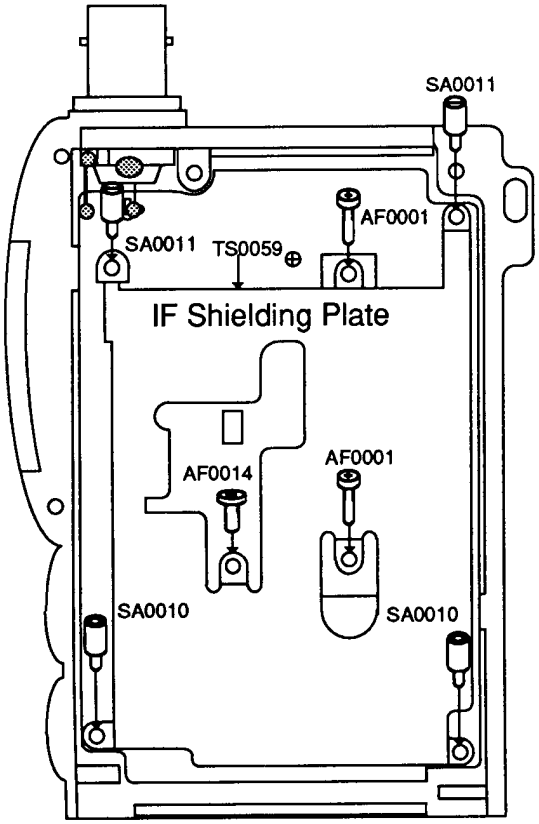

11) Jack Unit

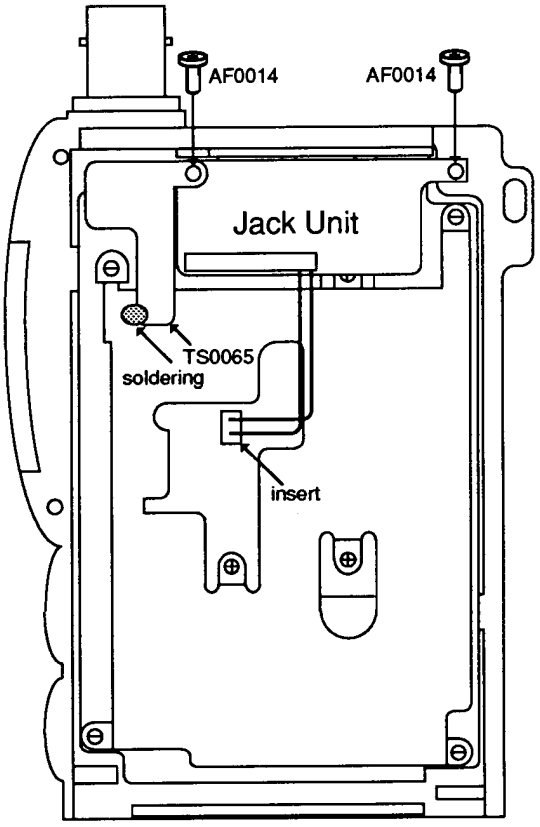

12) VOL Unit

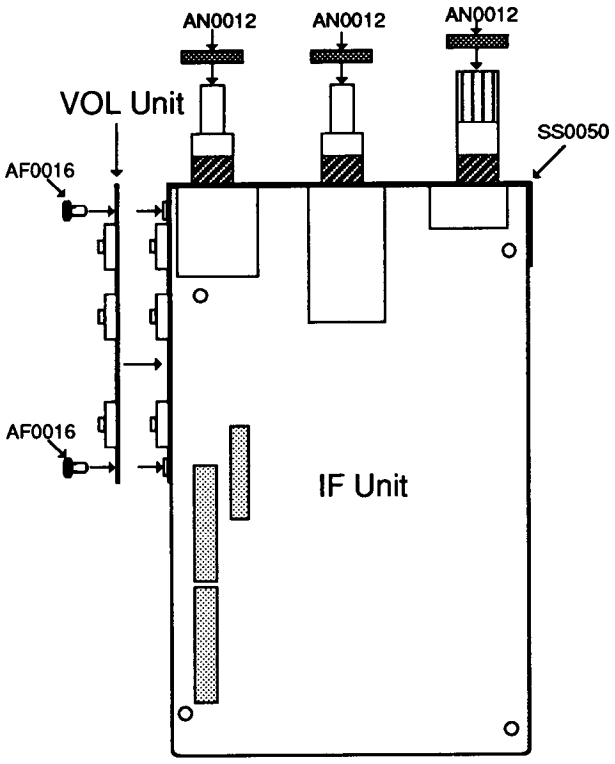

13) IF Unit

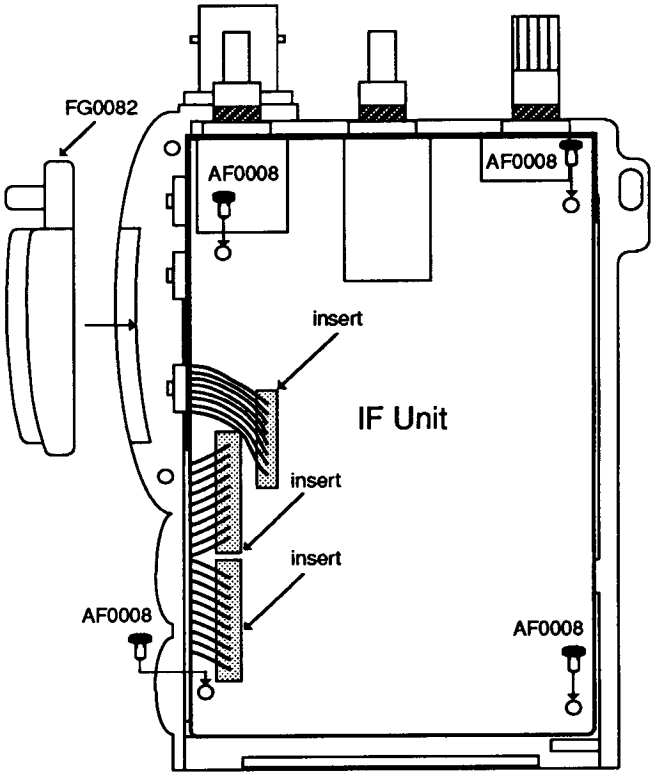

14) Name Plate

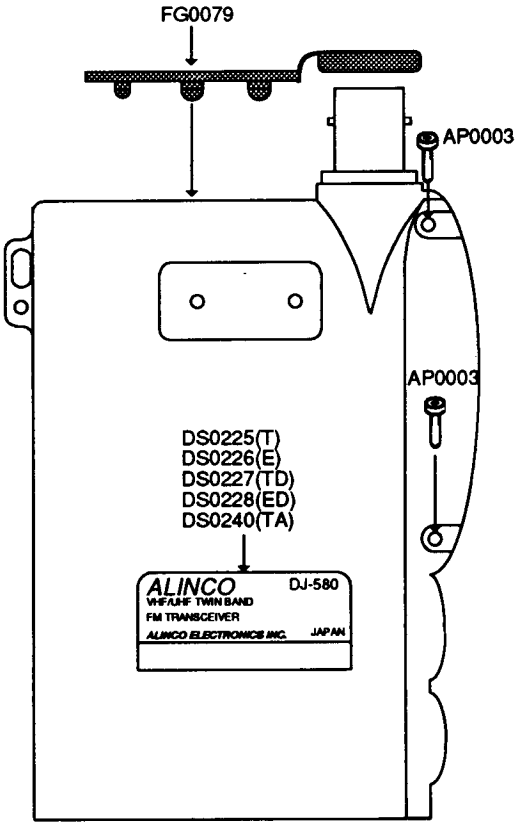

15) Knob

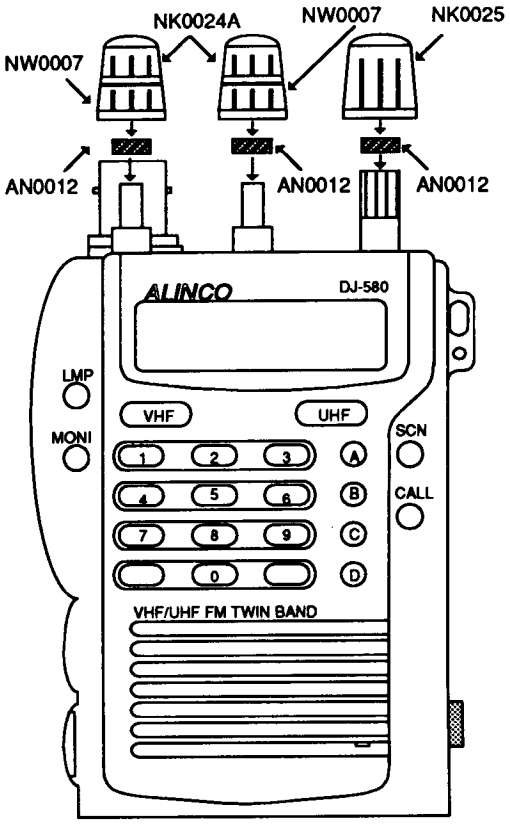

16) Battery Case Assembly (TD/ED only)

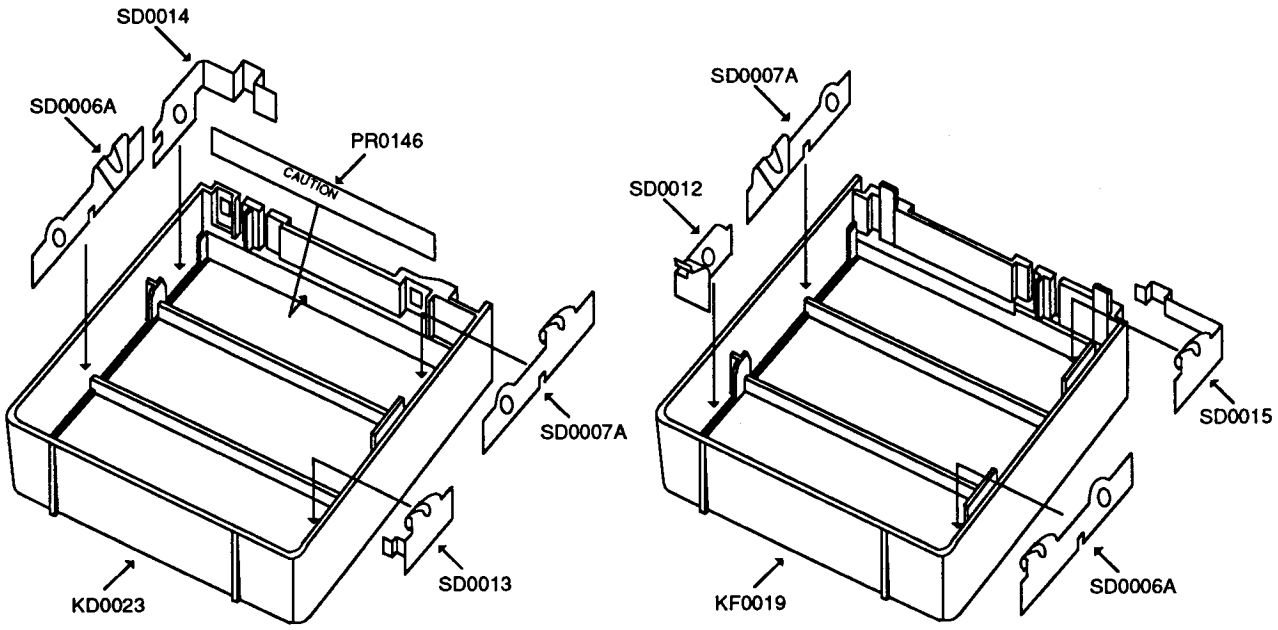

PC Board Views

1) VCO Unit Side A

V-VCO

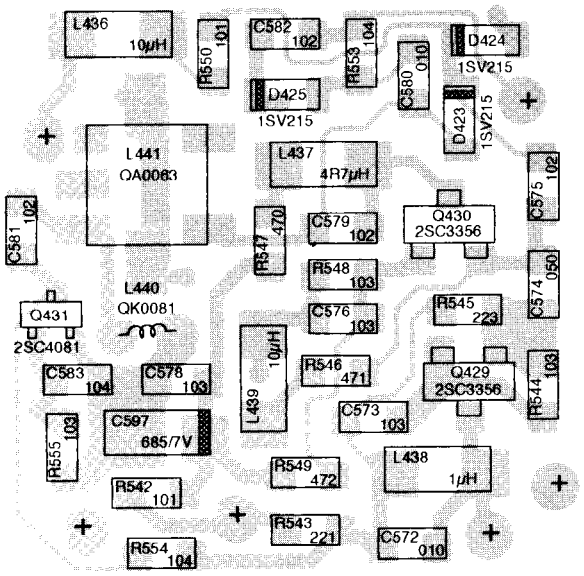

U-VCO

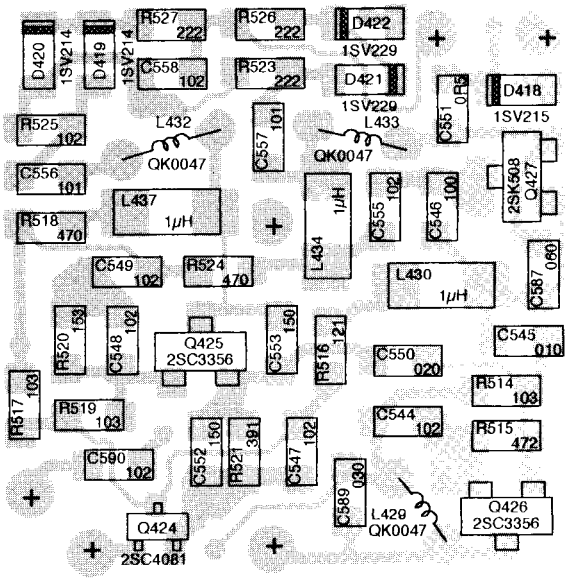

2) VCO Unit Side B

V-VCO

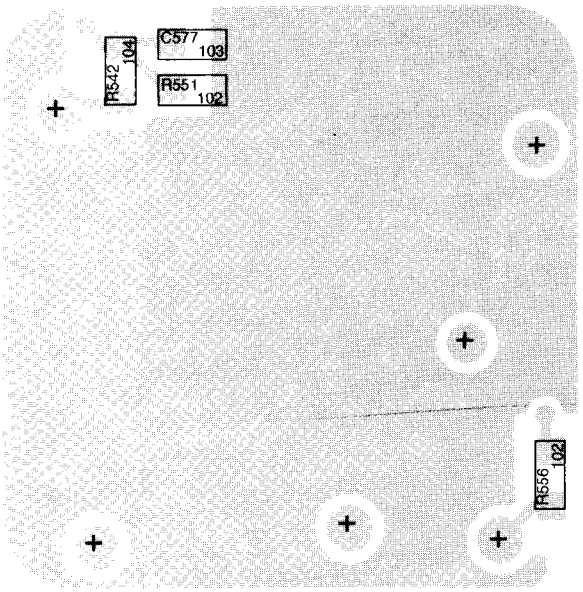

U-VCO

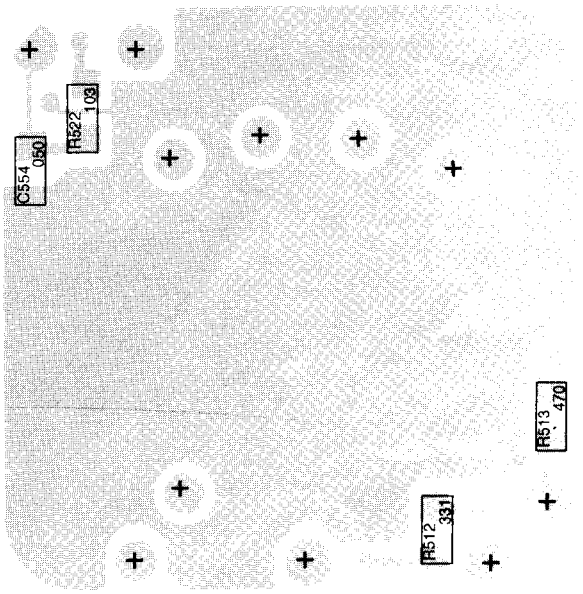

3) RF Unit Side A

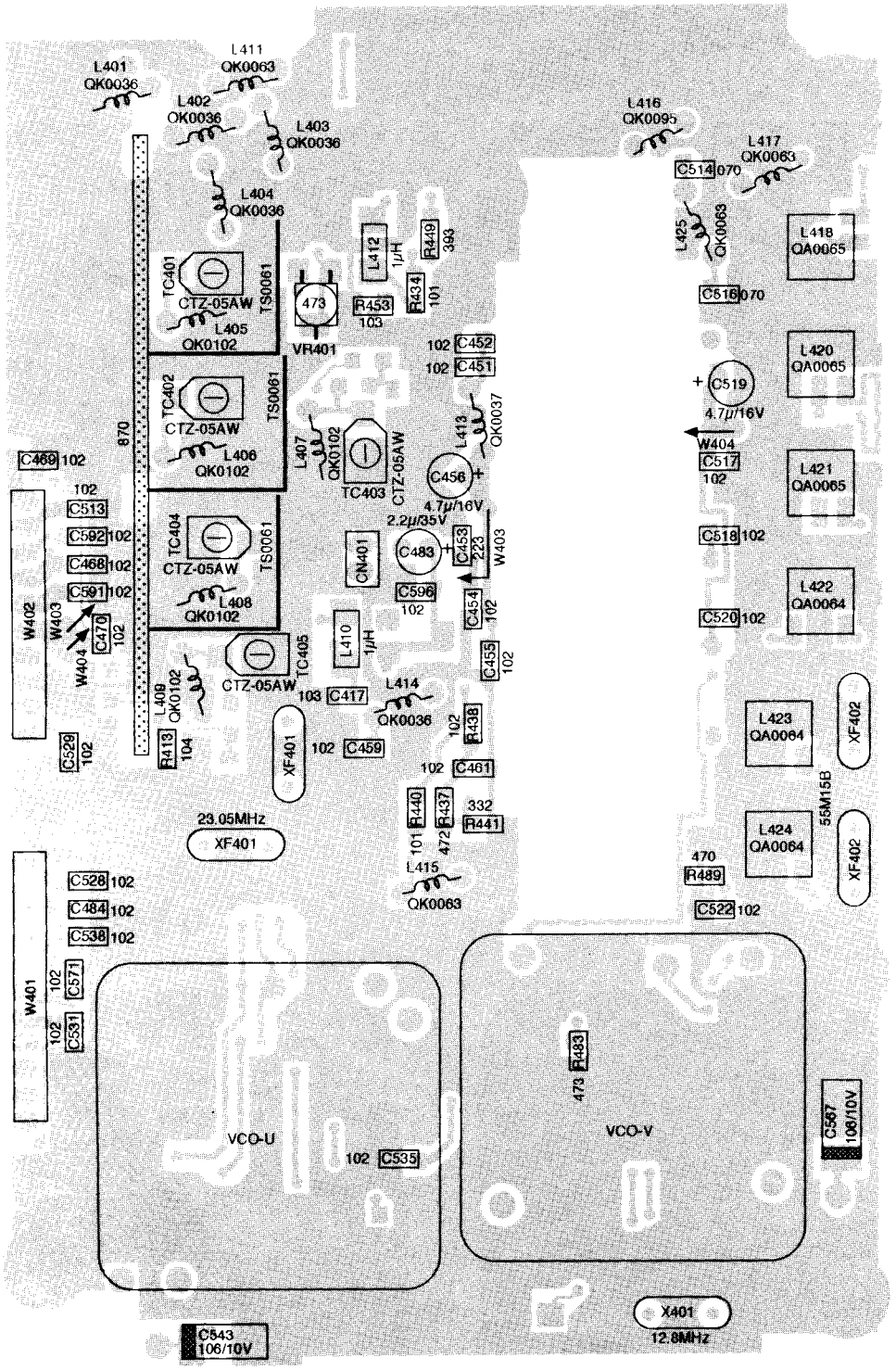

4) RF Unit Side B

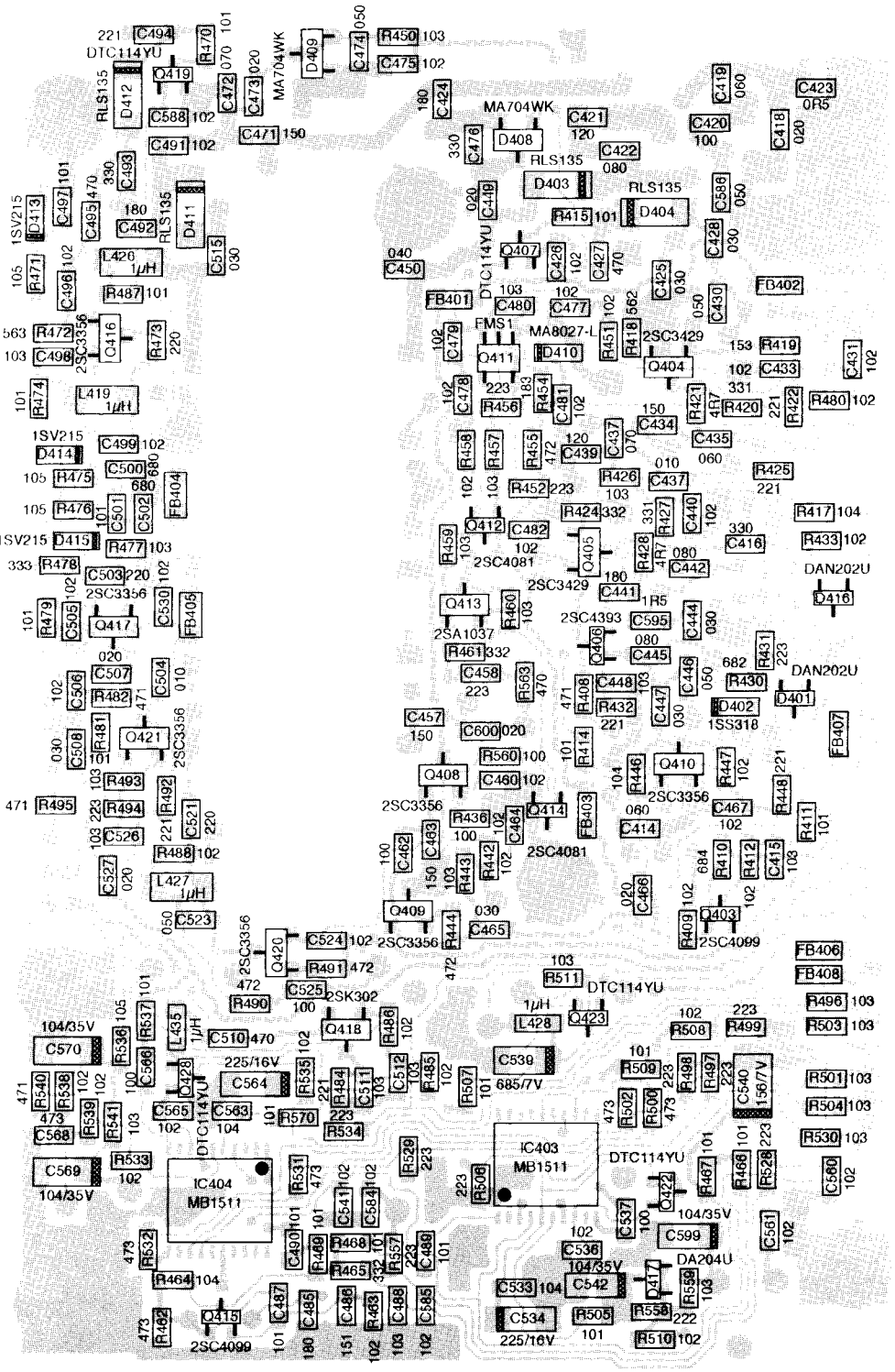

5) IF Unit Side A

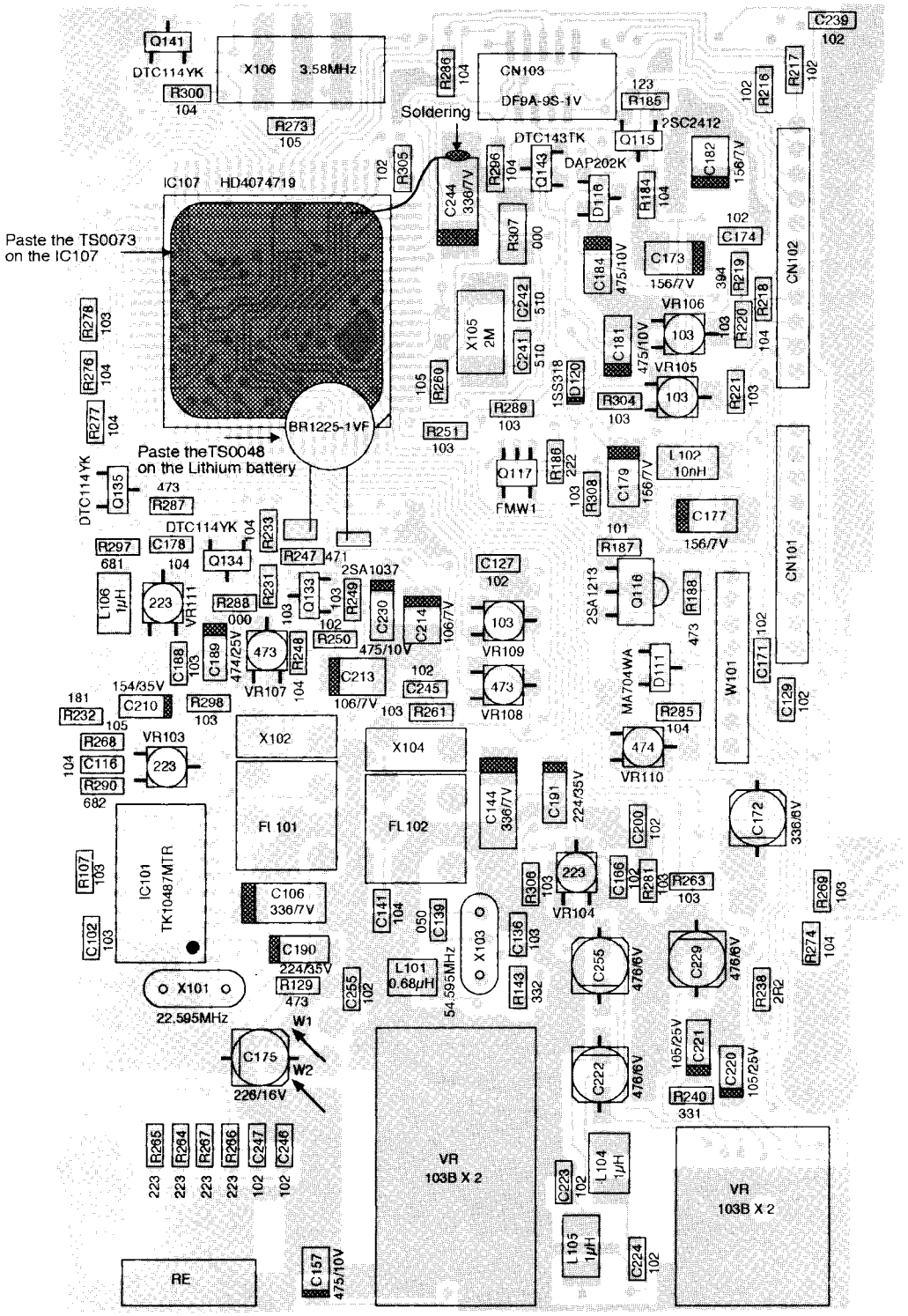

6) IF Unit Side B

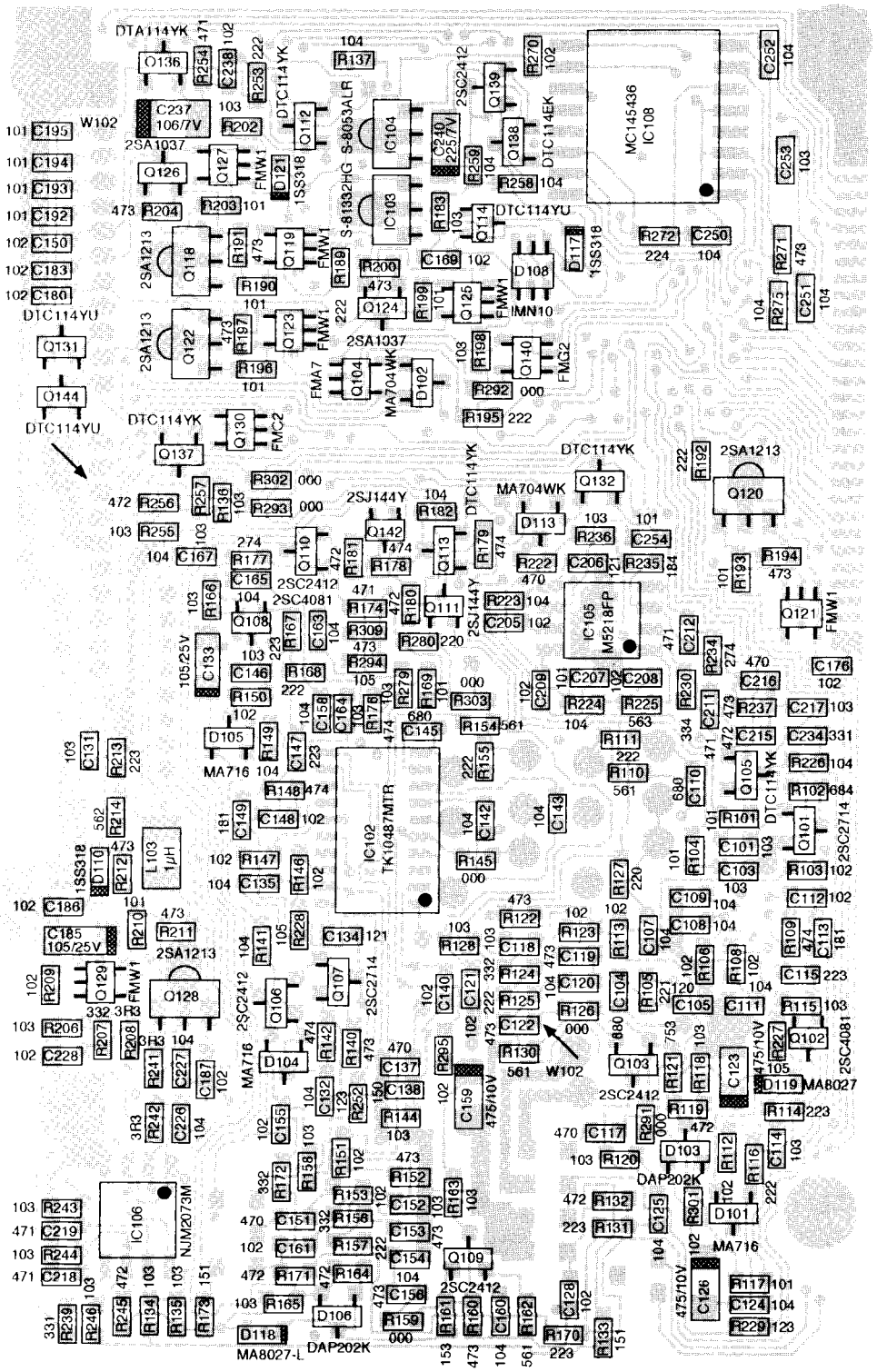

7) LCD Unit Side A

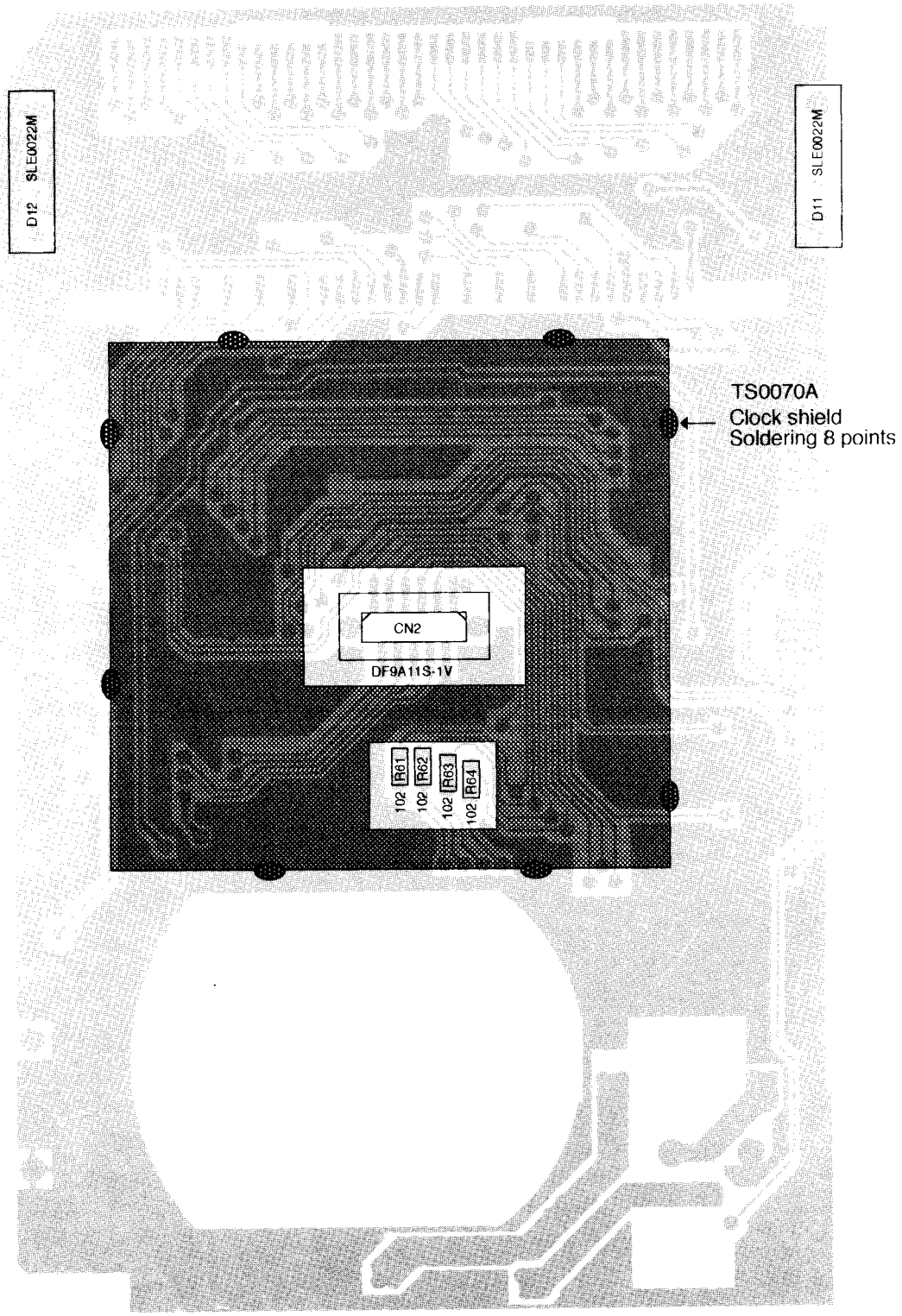

8) LCD Unit Side B

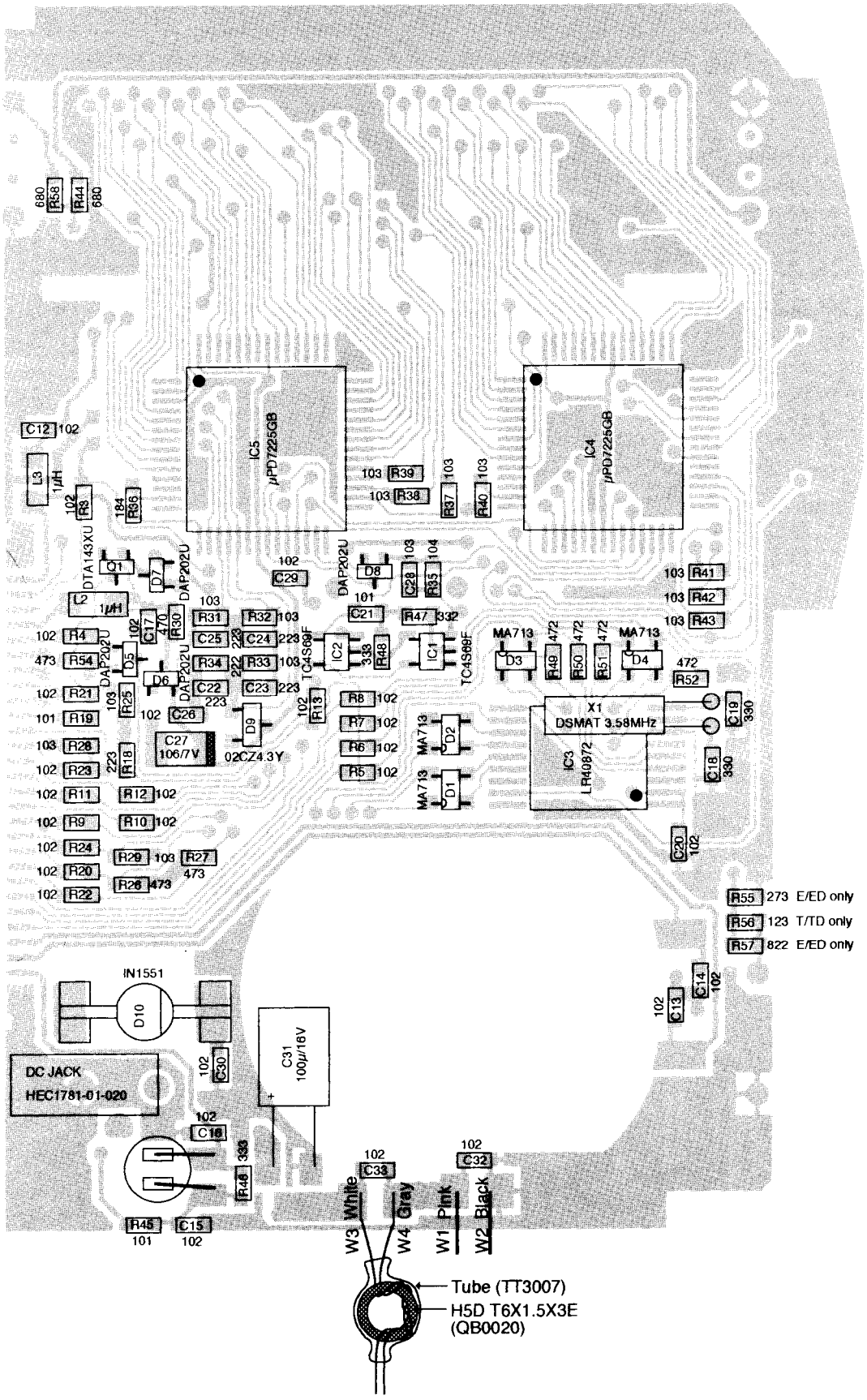

9) Key Unit Side A

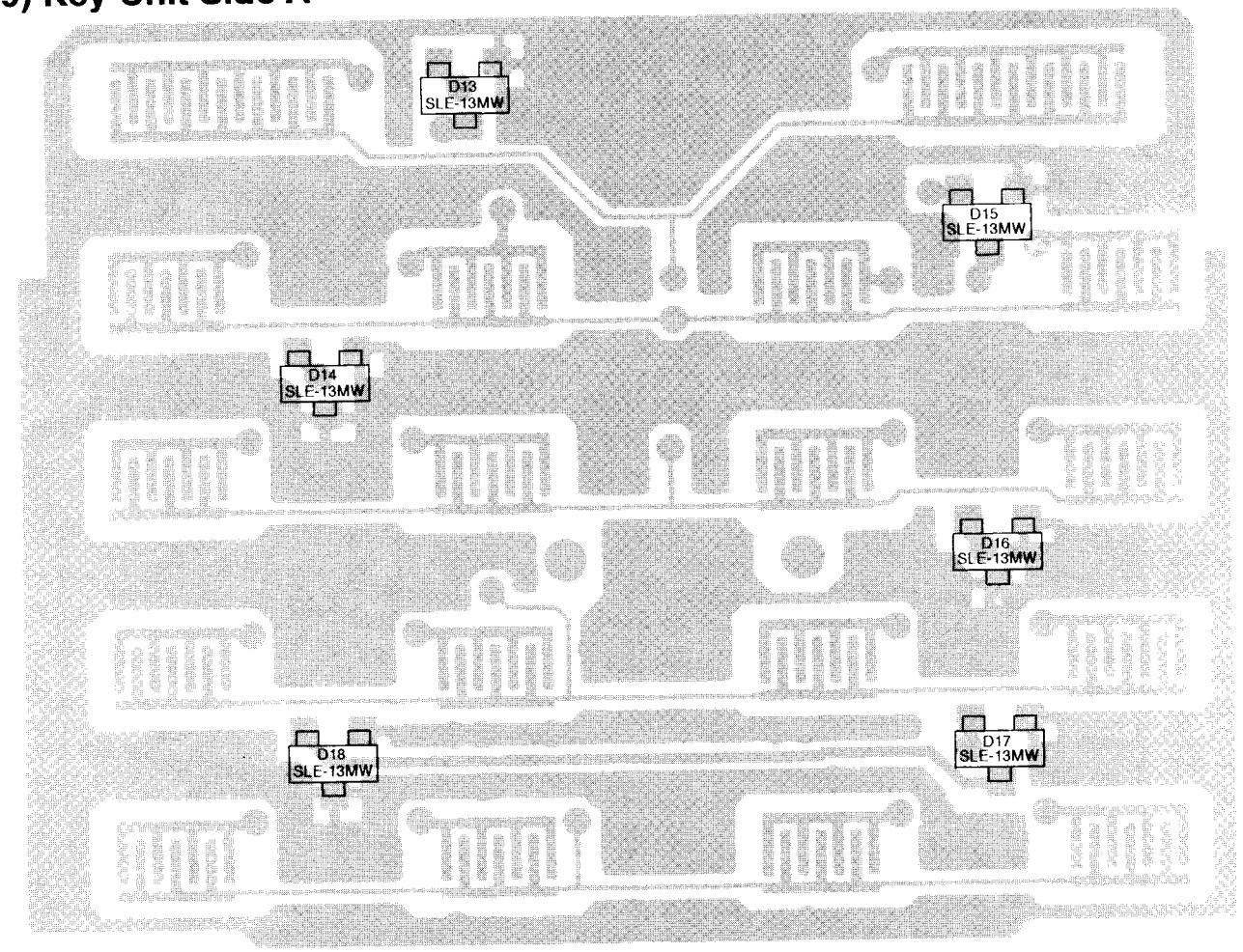

10) Key Unit Side B

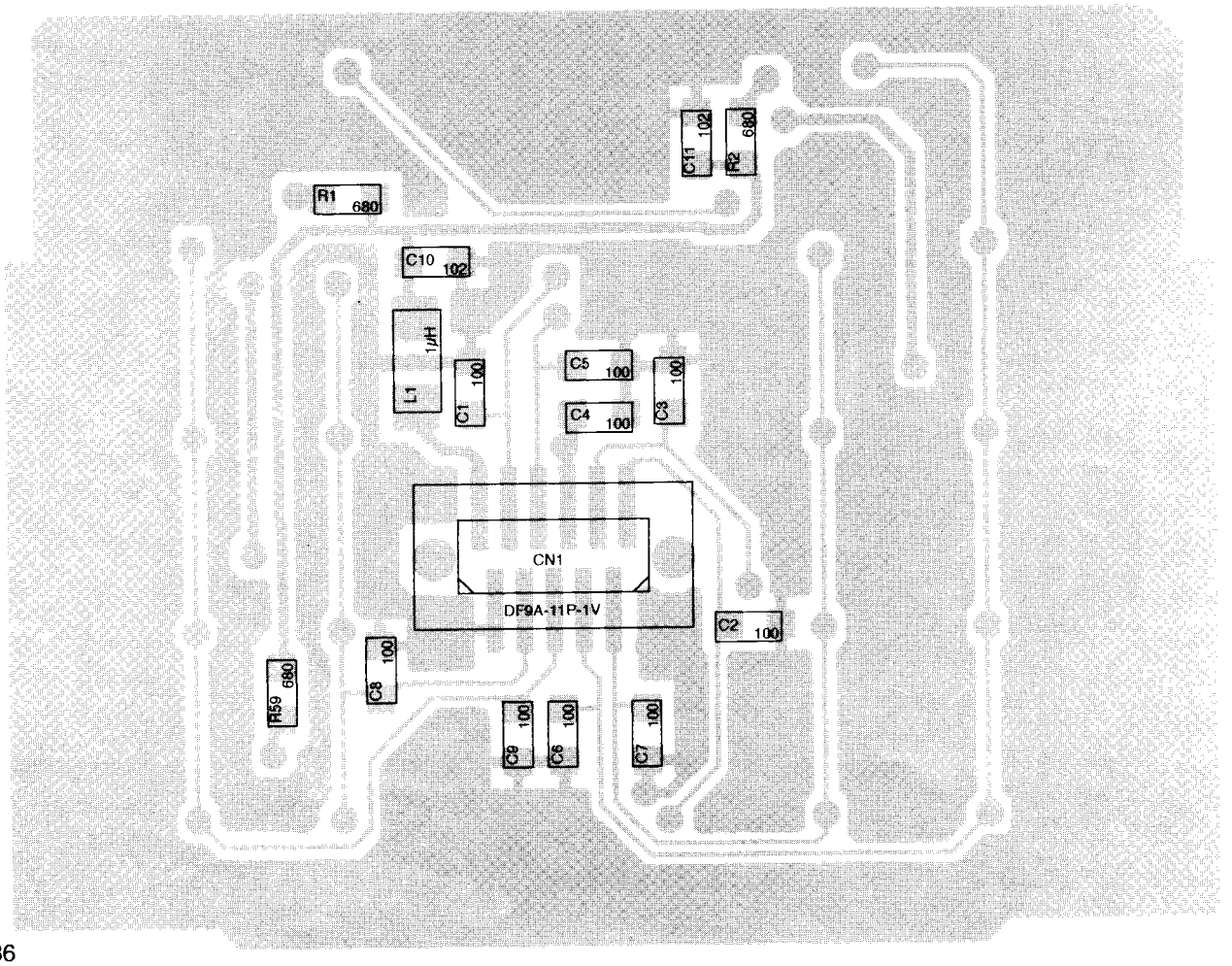

11) Jack Unit Side A

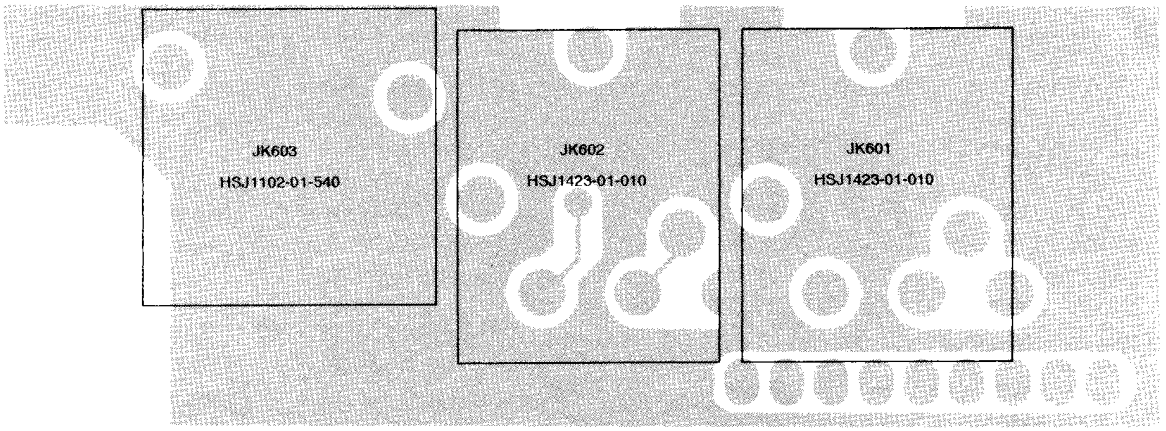

12) Jack Unit Side B

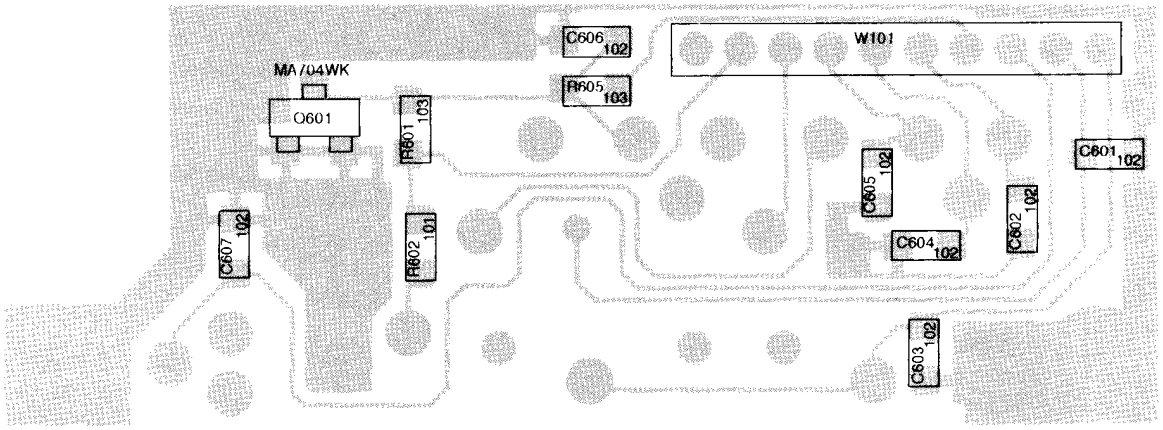

13) SW Unit Side B

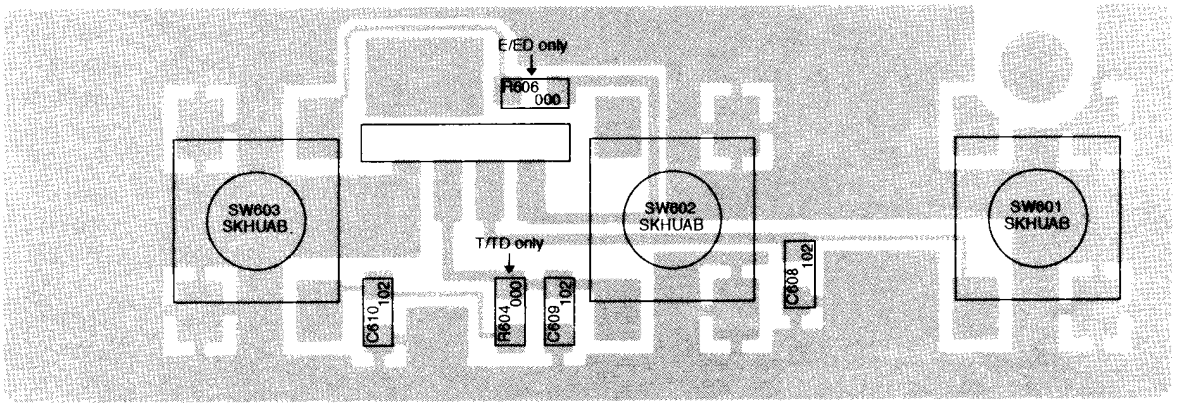

14) 870 Unit Side A

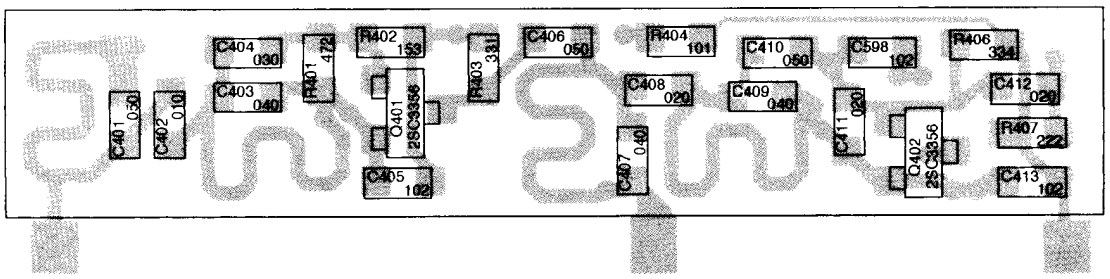

15) CTCSS Unit Side A

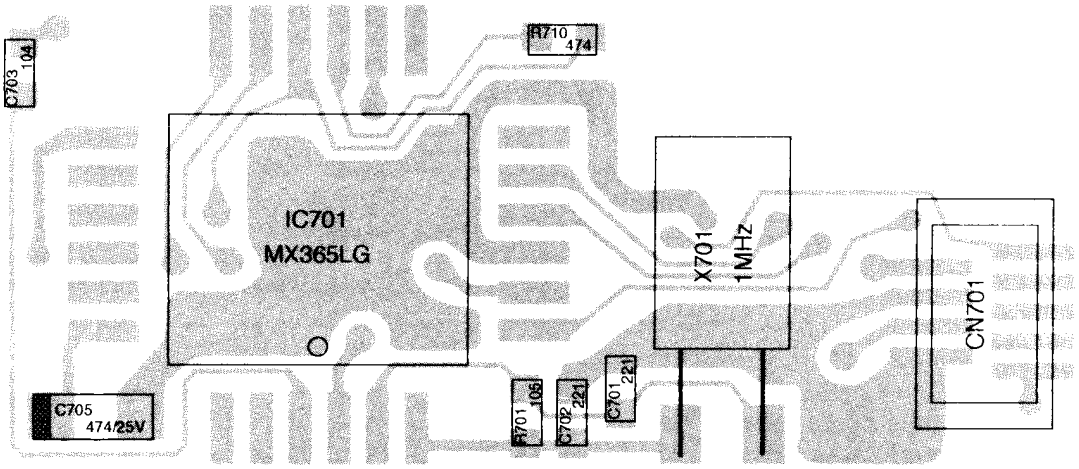

16) CTCSS Unit Side B

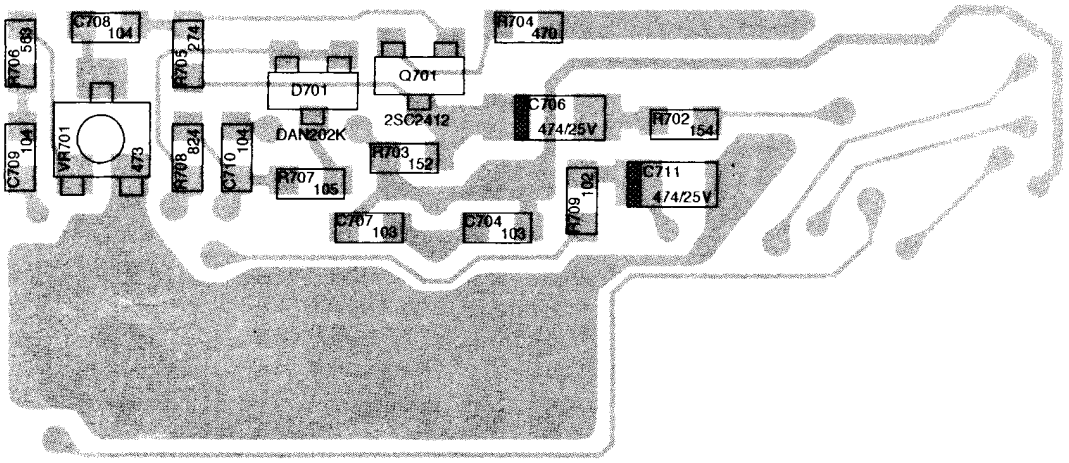

DJ-580T/E Parts List

Ref. No.	Parts No.	Description	Parts Name
	LCD Unit		
C12	CU3035	Chip C.	CM105 W5R 102K 50VAT
C13	CU3035	Chip C.	CM105 W5R 102K 50VAT
C14	CU3035	Chip C.	CM105 W5R 102K 50VAT
C15	CU3035	Chip C.	CM105 W5R 102K 50VAT
C16	CU3035	Chip C.	CM105 W5R 102K 50VAT
C17	CU3035	Chip C.	CM105 W5R 102K 50VAT
C18	CU3017	Chip C.	CM105 CH 330K 50VAT
C19	CU3017	Chip C.	CM105 CH 330K 50VAT
C20	CU3035	Chip C.	CM105 W5R 102K 50VAT
C21	CU3023	Chip C.	CM105 CH 101K 50VAT
C22	CU3054	Chip C.	CM105 W5R 223K 25VAT
C23	CU3054	Chip C.	CM105 W5R 223K 25VAT
C24	CU3054	Chip C.	CM105 W5R 223K 25VAT
C25	CU3054	Chip C.	CM105 W5R 223K 25VAT
C26	CU3035	Chip C.	CM105 W5R 102K 50VAT
C27	CS0209	Chip Tantal	TMC-M0J 106 MTR
C28	CU3052	Chip C.	CM105 W5R 103K 25VAT
C29	CU3035	Chip C.	CM105 W5R 102K 50VAT
C30	CU3035	Chip C.	CM105 W5R 102K 50VAT
C31	CE0056	Electrolytic C.	16MV 100 SW
C32	CU3035	Chip C.	CM105 W5R 102K 50VAT
C33	CU3035	Chip C.	CM105 W5R 102K 50VAT
CN2	UE0130	Connector	DF9A11S-1V
R3	RK3038	Chip R.	MCR03 EZ0J 102
R4	RK3038	Chip R.	MCR03 EZ0J 102
R5	RK3038	Chip R.	MCR03 EZ0J 102
R6	RK3038	Chip R.	MCR03 EZ0J 102
R7	RK3038	Chip R.	MCR03 EZ0J 102
R8	RK3038	Chip R.	MCR03 EZ0J 102
R9	RK3038	Chip R.	MCR03 EZ0J 102
R10	RK3038	Chip R.	MCR03 EZ0J 102
R11	RK3038	Chip R.	MCR03 EZ0J 102
R12	RK3038	Chip R.	MCR03 EZ0J 102
R13	RK3038	Chip R.	MCR03 EZ0J 102
R18	RK3054	Chip R.	MCR03 EZ0J 223
R19	RK3026	Chip R.	MCR03 EZ0J 101
R20	RK3038	Chip R.	MCR03 EZ0J 102
R21	RK3038	Chip R.	MCR03 EZ0J 102
R22	RK3038	Chip R.	MCR03 EZ0J 102
R23	RK3038	Chip R.	MCR03 EZ0J 102
R24	RK3038	Chip R.	MCR03 EZ0J 102
R25	RK3050	Chip R.	MCR03 EZ0J 103
R26	RK3058	Chip R.	MCR03 EZ0J 473
R27	RK3058	Chip R.	MCR03 EZ0J 473
R28	RK3050	Chip R.	MCR03 EZ0J 103
R29	RK3050	Chip R.	MCR03 EZ0J 103
R30	RK3022	Chip R.	MCR03 EZ0J 470
R31	RK3050	Chip R.	MCR03 EZ0J 103
R32	RK3050	Chip R.	MCR03 EZ0J 103
R33	RK3050	Chip R	MCR03 EZ0J 103
R34	RK3042	Chip R	MCR03 EZ0J 222
R35	RK3062	Chip R	MCR03 EZ0J 104
R36	RK3065	Chip R	MCR03 EZ0J 184
R37	RK3050	Chip R	MCR03 EZ0J 103
R38	RK3050	Chip R	MCR03 EZ0J 103

Ref. No.	Parts No.	Description	Parts Name
R39	RK3050	Chip R	MCR03 EZ0J 103
R40	RK3050	Chip R.	MCR03 EZ0J 103
R41	RK3050	Chip R.	MCR03 EZ0J 103
R42	RK3050	Chip R.	MCR03 EZ0J 103
R43	RK3050	Chip R.	MCR03 EZ0J 103
R44	RK3024	Chip R.	MCR03 EZ0J 680
R45	RK3026	Chip R.	MCR03 EZ0J 101
R46	RK3056	Chip R.	MCR03 EZ0J 333
R47	RK3044	Chip R.	MCR03 EZ0J 332
R48	RK3056	Chip R.	MCR03 EZ0J 333
R49	RK3046	Chip R.	MCR03 EZ0J 472
R50	RK3046	Chip R.	MCR03 EZ0J 472
R51	RK3046	Chip R.	MCR03 EZ0J 472
R52	RK3046	Chip R.	MCR03 EZ0J 472
R54	RK3058	Chip R.	MCR03 EZ0J 473
R55	RK3055	Chip R.	MCR03 EZ0J 273(E/ED)
R56	RK3051	Chip R.	MCR03 EZ0J 123(T/TD)
R57	RK3049	Chip R.	MCR03 EZ0J 822(E/ED)
R58	RK3024	Chip R.	MCR03 EZ0J 680
R61	RK3038	Chip R.	MCR03 EZ0J 102
R62	RK3038	Chip R.	MCR03 EZ0J 102
R63	RK3038	Chip R.	MCR03 EZ0J 102
R64	RK3038	Chip R.	MCR03 EZ0J 102
L2	QC0003	Chip L.	MLF3216A 1R0M
L3	QC0003	Chip L.	MLF3216A 1R0M
IC1	XA0137	IC	TC4S69F
IC2	XA0137	IC	TC4S69F
IC3	XA0042	IC	LR40872
IC4	XA0141	IC	µPD7225GB-3B7
IC5	XA0141	IC	µPD7225GB-3B7
X1	XQ0045	Crystal	DSMAT 3.58 MHz 18P
D1	XD0128	Diode	MA713TX
D2	XD0128	Diode	MA713TX
D3	XD0128	Diode	MA713TX
D4	XD0128	Diode	MA713TX
D5	XD0231	Diode	DAP202U T106
D6	XD0231	Diode	DAP202U T106
D7	XD0231	Diode	DAP202U T106
D8	XD0231	Diode	DAP202U T106
D9	XD0113	Diode	02CZ4.3YTE85L
D10	XD0110	Diode	1N5551
D11	XL0025	LED	SLE0022M
D12	XL0025	LED	SLE0022M
Q1	XU0032	Transistor	DTA143XU T106
FB1	QB0020	Toroidal Core	H5D T6X1.5X3E

Ref. No.	Parts No.	Description	Parts Name
W1	MPDJ11AA	Wire	#26P 02-110-02
W2	MBDJ11AA	Wire	#26B 2-11-2
W3	MWDK06AA	Wire	#28W 02-060-02
W4	MNDK06AA	Wire	#28N 02-060-02
W5	MADJH4AA	Wire	#26A 2-045-2
W6	MKCL02AA	Wire	#30K 02-020-02
W7	MBCL02AA	Wire	#30B 02-020-02
W8	MBCL02AA	Wire	#30B 02-020-02
W9	MBCL02AA	Wire	#30B 02-020-02
	UJ0015	DC Jack	HEC2781-01-020
	ES0005	Speaker	036S13D
	EY0006	Microphone	WM-60AT
	EL0016	LCD	DJ-F5 LCD
	UP0216B	PCB	LCD Unit B
	TS0064	Shield Tape	LCD Shield
	TS0070A	Shield Tape	CLOCK Shield
	TT1008	Tube	F2 AWG20
	YZ0042	Adhesion	
	ST0030		LCD Flame
	TT3004	Tube	8.0 x 1.0 mm
	FG0087		LCD Connector
	DH0007		Lighting Plate
	TT3007	Tube	6.0

Ref. No.	Parts No.	Description	Parts Name
		Key Unit	
D13	XL0016	LED	SLM-13MW T96B
D14	XL0016	LED	SLM-13MW T96B
D15	XL0016	LED	SLM-13MW T96B
D16	XL0016	LED	SLM-13MW T96B
D17	XL0016	LED	SLM-13MW T96B
D18	XL0016	LED	SLM-13MW T96B
C1	CU3011	Chip C.	CM105 CH 100D 50VAT
C2	CU3011	Chip C.	CM105 CH 100D 50VAT
C3	CU3011	Chip C.	CM105 CH 100D 50VAT
C4	CU3011	Chip C.	CM105 CH 100D 50VAT
C5	CU3011	Chip C.	CM105 CH 100D 50VAT
C6	CU3011	Chip C.	CM105 CH 100D 50VAT
C7	CU3011	Chip C.	CM105 CH 100D 50VAT
C8	CU3011	Chip C.	CM105 CH 100D 50VAT
C9	CU3011	Chip C.	CM105 CH 100D 50VAT
C10	CU3035	Chip C.	CM105 W5R 102K 50VAT
C11	CU3035	Chip C.	CM105 W5R 102K 50VAT
R1	RK3024	Chip R.	MCR03 EZ0J 680
R2	RK3024	Chip R.	MCR03 EZ0J 680
R59	RK3024	Chip R.	MCR03 EZ0J 680
L1	QC0003	Chip L.	MLF3216 A 1R0 M
CN1	UE0133	Connector	DF9A-11P-1V
	UP0216B	PCB	LCD用のPCBと共用

Ref. No.	Parts No.	Description	Parts Name
		VCO-V Unit	
C572	CU3002	Chip C.	CM105 CH 010C 50VAT
C573	CU3052	Chip C.	CM105 W5R 103K 25VAT
C574	CU3006	Chip C.	CM105 CH 050C 50VAT
C575	CU3035	Chip C.	CM105 W5R 102K 50VAT
C576	CU3052	Chip C.	CM105 W5R 103K 25VAT
C577	CU3052	Chip C.	CM105 W5R 103K 25VAT
C578	CU3052	Chip C.	CM105 W5R 103K 25VAT
C579	CU3035	Chip C.	CM105 W5R 102K 50VAT
C580	CU3002	Chip C.	CM105 CH 010C 50VAT
C581	CU3035	Chip C.	CM105 W5R 102K 50VAT
C582	CU3035	Chip C.	CM105 W5R 102K 50VAT
C583	CU3059	Chip C.	CM105 Y5V 104Z 25VAT
C597	CS0236	Chip Tantal	TMC-M0J685MTR
R542	RK3026	Chip R.	MCR03 EZ0J 101
R543	RK3030	Chip R.	MCR03 EZ0J 221
R544	RK3050	Chip R.	MCR03 EZ0J 103
R545	RK3054	Chip R.	MCR03 EZ0J 223
R546	RK3034	Chip R.	MCR03 EZ0J 471
R547	RK3022	Chip R.	MCR03 EZ0J 470
R548	RK3050	Chip R.	MCR03 EZ0J 103
R549	RK3046	Chip R.	MCR03 EZ0J 472
R550	RK3026	Chip R.	MCR03 EZ0J 101
R551	RK3038	Chip R.	MCR03 EZ0J 102
R552	RK3062	Chip R.	MCR03 EZ0J 104
R553	RK3062	Chip R.	MCR03 EZ0J 104
R554	RK3062	Chip R.	MCR03 EZ0J 104
R555	RK3050	Chip R.	MCR03 EZ0J 103
R556	RK3038	Chip R.	MCR03 EZ0J 102
L436	QC0010	Chip L.	MLF3216E 100M
L437	QC0110	Chip L.	LER015T4R7K
L438	QC0003	Chip L.	MLF3216A 1R0M
L439	QC0010	Chip L.	MLF3216E 100M
L440	QK0081	Coil	0.4-1.5 x 4T
L441	QA0063	Coil	VCO Coil -T QA63
D423	XD0132	Diode	1SV215 TPH4
D424	XD0132	Diode	1SV215 TPH4
D425	XD0132	Diode	1SV215 TPH4
Q429	XT0030	Transistor	2SC3356 T1BR25
Q430	XT0030	Transistor	2SC3356 T1BR25
Q431	XT0095	Transistor	2SC4081 T106R
	UT0019	Terminal	CK-1-2
	TS0055	Case	VCO Case

Ref. No.	Parts No.	Description	Parts Name
		VCO-U Unit	
C544	CU3035	Chip C.	CM105 W5R 102K 50VAT
C545	CU3002	Chip C.	CM105 CH 010C 50VAT
C546	CU3011	Chip C.	CM105 CH 100D 50VAT
C547	CU3035	Chip C.	CM105 W5R 102K 50VAT
C548	CU3035	Chip C.	CM105 W5R 102K 50VAT
C549	CU3035	Chip C.	CM105 W5R 102K 50VAT
C550	CU3003	Chip C.	CM105 CH 020C 50VAT
C551	CU3001	Chip C.	CM105 CH 0R5C 50VAT
C552	CU3013	Chip C.	CM105 CH 150K 50VAT
C553	CU3013	Chip C.	CM105 CH 150K 50VAT
C554	CU3035	Chip C.	CM105 W5R 102K 50VAT
C555	CU3035	Chip C.	CM105 W5R 102K 50VAT
C556	CU3023	Chip C.	CM105 CH 101K 50VAT
C557	CU3023	Chip C.	CM105 CH 101K 50VAT
C558	CU3035	Chip C.	CM105 W5R 102K 50VAT
C587	CU3007	Chip C.	CM105 CH 060C 50VAT
C589	CU3004	Chip C.	CM105 CH 030C 50VAT
C590	CU3035	Chip C.	CM105 W5R 102K 50VAT
R512	RK3032	Chip R.	MCR03 EZ0J 331
R513	RK3022	Chip R.	MCR03 EZ0J 470
R514	RK3050	Chip R.	MCR03 EZ0J 103
R515	RK3046	Chip R.	MCR03 EZ0J 472
R516	RK3027	Chip R.	MCR03 EZ0J 121
R517	RK3050	Chip R.	MCR03 EZ0J 103
R518	RK3022	Chip R.	MCR03 EZ0J 470
R519	RK3050	Chip R.	MCR03 EZ0J 103
R520	RK3052	Chip R.	MCR03 EZ0J 153
R521	RK3033	Chip R.	MCR03 EZ0J 391
R522	RK3050	Chip R.	MCR03 EZ0J 103
R523	RK3042	Chip R.	MCR03 EZ0J 222
R524	RK3022	Chip R.	MCR03 EZ0J 470
R525	RK3038	Chip R.	MCR03 EZ0J 102
R526	RK3042	Chip R.	MCR03 EZ0J 222
R527	RK3042	Chip R.	MCR03 EZ0J 222
L429	QK0047	Coil	0.5-2.2 x 3.5T
L430	QC0003	Chip L.	MLF3216A 1R0M
L431	QC0003	Chip L.	MLF3216A 1R0M
L432	QK0047	Coil	0.5-2.2 x 3.5T
L433	QK0047	Coil	0.5-2.2 x 3.5T
L434	QC0003	Chip L.	MLF3216A 1R0M
D418	XD0132	Diode	1SV215 TPH4
D419	XD0131	Diode	1SV214 TPH4
D420	XD0131	Diode	1SV214 TPH4
D421	XD0133	Diode	1SV229 TPH3
D422	XD0133	Diode	1SV229 TPH3
Q424	XT0095	Transistor	2SC4081 T106R
Q425	XT0030	Transistor	2SC3356 T1BR25
Q426	XT0030	Transistor	2SC3356 T1BR25
Q427	XE0010	FET	2SK508K52T2
	UT0019	Terminal	CK-1-2
	TS0055	Case	VCO Case

Ref. No.	Parts No.	Description	Parts Name
RF Unit			
C414	CU3007	Chip C.	CM105 CH 060C 50VAT
C415	CU3052	Chip C.	CM105 W5R 103K 25VAT
C416	CU3017	Chip C.	CM105 CH 330K 50VAT
C417	CU3052	Chip C.	CM105 W5R 103K 25VAT
C418	CU3003	Chip C.	CM105 CH 020C 50VAT
C419	CU3007	Chip C.	CM105 CH 060C 50VAT
C420	CU3011	Chip C.	CM105 CH 100D 50VAT
C421	CU3012	Chip C.	CM105 CH 120K 50VAT
C422	CU3009	Chip C.	CM105 CH 080C 50VAT
C423	CU3001	Chip C.	CM105 CH 0R5C 50VAT
C424	CU3014	Chip C.	CM105 CH 180K 50VAT
C425	CU3004	Chip C.	CM105 CH 030C 50VAT
C426	CU3035	Chip C.	CM105 W5R 102K 50VAT
C427	CU3019	Chip C.	CM105 CH 470K 50VAT
C428	CU3004	Chip C.	CM105 CH 030C 50VAT
C430	CU3006	Chip C.	CM105 CH 050C 50VAT
C431	CU3035	Chip C.	CM105 W5R 102K 50VAT
C433	CU3035	Chip C.	CM105 W5R 102K 50VAT
C434	CU3013	Chip C.	CM105 CH 150K 50VAT
C435	CU3007	Chip C.	CM105 CH 060C 50VAT
C437	CU3002	Chip C.	CM105 CH 010C 50VAT
C438	CU3008	Chip C.	CM105 CH 070C 50VAT
C439	CU3012	Chip C.	CM105 CH 120K 50VAT
C440	CU3035	Chip C.	CM105 W5R 102K 50VAT
C441	CU3014	Chip C.	CM105 CH 180K 50VAT
C442	CU3009	Chip C.	CM105 CH 080C 50VAT
C444	CU3004	Chip C.	CM105 CH 030C 50VAT
C445	CU3009	Chip C.	CM105 CH 080C 50VAT
C446	CU3006	Chip C.	CM105 CH 050C 50VAT
C447	CU3004	Chip C.	CM105 CH 030C 50VAT
C448	CU3052	Chip C.	CM105 W5R 103K 25VAT
C449	CU3003	Chip C.	CM105 CH 020C 50VAT
C450	CU3005	Chip C.	CM105 CH 040C 50VAT
C451	CU3035	Chip C.	CM105 W5R 102K 50VAT
C452	CU3035	Chip C.	CM105 W5R 102K 50VAT
C453	CU3054	Chip C.	CM105 W5R 223K 25VAT
C454	CU3035	Chip C.	CM105 W5R 102K 50VAT
C455	CU3035	Chip C.	CM105 W5R 102K 50VAT
C456	CE0032	Electrolytic C.	16MV 4R7 UWA
C457	CU3013	Chip C.	CM105 CH 150K 50VAT
C458	CU3054	Chip C.	CM105 W5R 223K 25VAT
C459	CU3035	Chip C.	CM105 W5R 102K 50VAT
C460	CU3035	Chip C.	CM105 W5R 102K 50VAT
C461	CU3035	Chip C.	CM105 W5R 102K 50VAT
C462	CU3011	Chip C.	CM105 CH 100D 50VAT
C463	CU3013	Chip C.	CM105 CH 150K 50VAT
C464	CU3035	Chip C.	CM105 W5R 102K 50VAT
C465	CU3004	Chip C.	CM105 CH 030C 50VAT
C466	CU3003	Chip C.	CM105 CH 020C 50VAT
C467	CU3035	Chip C.	CM105 W5R 102K 50VAT
C468	CU3035	Chip C.	CM105 W5R 102K 50VAT
C469	CU3035	Chip C.	CM105 W5R 102K 50VAT
C470	CU3035	Chip C.	CM105 W5R 102K 50VAT
C471	CU3013	Chip C.	CM105 CH 150K 50VAT
C472	CU3008	Chip C.	CM105 CH 070C 50VAT
C473	CU3003	Chip C.	CM105 CH 020C 50VAT
C474	CU3006	Chip C.	CM105 CH 050C 50VAT

Ref. No.	Parts No.	Description	Parts Name
C475	CU3035	Chip C.	CM105 W5R 102K 50VAT
C476	CU3004	Chip C.	CM105 CH 030C 50VAT
C477	CU3035	Chip C.	CM105 W5R 102K 50VAT
C478	CU3035	Chip C.	CM105 W5R 102K 50VAT
C479	CU3035	Chip C.	CM105 W5R 102K 50VAT
C480	CU3052	Chip C.	CM105 W5R 103K 25VAT
C481	CU3035	Chip C.	CM105 W5R 102K 50VAT
C482	CU3035	Chip C.	CM105 W5R 102K 50VAT
C483	CE0024	Electrolytic C.	35MV 2R2 UW
C484	CU3035	Chip C.	CM105 W5R 102K 50VAT
C485	CU3014	Chip C.	CM105 CH 180K 50VAT
C486	CU3025	Chip C.	CM105 CH 151K 50VAT
C487	CU3023	Chip C.	CM105 CH 101K 50VAT
C488	CU3052	Chip C.	CM105 W5R 103K 25VAT
C489	CU3023	Chip C.	CM105 CH 101K 50VAT
C491	CU3035	Chip C.	CM105 W5R 102K 50VAT
C490	CU3023	Chip C.	CM105 CH 101K 50VAT
C492	CU3014	Chip C.	CM105 CH 180K 50VAT
C493	CU3017	Chip C.	CM105 CH 330K 50VAT
C494	CU3058	Chip C.	GR39CH221 J 50PT
C495	CU3019	Chip C.	CM105 CH 470K 50VAT
C496	CU3035	Chip C.	CM105 W5R 102K 50VAT
C497	CU3023	Chip C.	CM105 CH 101K 50VAT
C498	CU3052	Chip C.	CM105 W5R 103K 25VAT
C499	CU3035	Chip C.	CM105 W5R 102K 50VAT
C500	CU3021	Chip C.	CM105 CH 680K 50VAT
C501	CU3023	Chip C.	CM105 CH 101K 50VAT
C502	CU3021	Chip C.	CM105 CH 680K 50VAT
C503	CU3015	Chip C.	CM105 CH 220K 50VAT
C504	CU3002	Chip C.	CM105 CH 010C 50VAT
C505	CU3035	Chip C.	CM105 W5R 102K 50VAT
C506	CU3035	Chip C.	CM105 W5R 102K 50VAT
C507	CU3003	Chip C.	CM105 CH 020C 50VAT
C508	CU3004	Chip C.	CM105 CH 030C 50VAT
C510	CU3019	Chip C.	CM105 CH 470K 50VAT
C511	CU3052	Chip C.	CM105 W5R 103K 25VAT
C512	CU3052	Chip C.	CM105 W5R 103K 25VAT
C513	CU3035	Chip C.	CM105 W5R 102K 50VAT
C514	CU3008	Chip C.	CM105 CH 070C 50VAT
C515	CU3004	Chip C.	CM105 CH 030C 50VAT
C516	CU3008	Chip C.	CM105 CH 070C 50VAT
C517	CU3035	Chip C.	CM105 W5R 102K 50VAT
C518	CU3035	Chip C.	CM105 W5R 102K 50VAT
C519	CE0032	Electrolytic C.	16MV 4R7 UWA
C520	CU3035	Chip C.	CM105 W5R 102K 50VAT
C521	CU3015	Chip C.	CM105 CH 220K 50VAT
C522	CU3035	Chip C.	CM105 W5R 102K 50VAT
C523	CU3006	Chip C.	CM105 CH 050C 50VAT
C524	CU3035	Chip C.	CM105 W5R 102K 50VAT
C525	CU3011	Chip C.	CM105 CH 100D 50VAT
C526	CU3052	Chip C.	CM105 W5R 103K 25VAT
C527	CU3003	Chip C.	CM105 CH 020C 50VAT
C528	CU3035	Chip C.	CM105 W5R 102K 50VAT
C529	CU3035	Chip C.	CM105 W5R 102K 50VAT
C530	CU3035	Chip C.	CM105 W5R 102K 50VAT
C531	CU3035	Chip C.	CM105 W5R 102K 50VAT
C533	CU3059	Chip C.	CM105 Y5V 104Z 25VAT
C534	CS0220	Chip Tantal	TMC-M1C 225 MTR

Ref. No.	Parts No.	Description	Parts Name
C535	CU3035	Chip C.	CM105 W5R 102K 50VAT
C536	CU3035	Chip C.	CM105 W5R 102K 50VAT
C537	CU3002	Chip C.	CM105 CH 010C 50VAT
C538	CU3035	Chip C.	CM105 W5R 102K 50VAT
C539	CS0236	Chip Tantal	TMC-M0J 685 MTR
C540	CS0210	Chip Tantal	TMC-M0J 156 MTR
C541	CU3035	Chip C.	CM105 W5R 102K 50VAT
C542	CS0063	Chip Tantal	TMC 1V104 TR
C543	CS0216	Chip Tantal	TMC-M1A 106 MTR
C559	CS0063	Chip Tantal	TMC 1V104 TR
C560	CU3035	Chip C.	CM105 W5R 102K 50VAT
C561	CU3035	Chip C.	CM105 W5R 102K 50VAT
C563	CU3059	Chip C.	CM105 Y5V 104Z 25VAT
C564	CS0220	Chip Tantal	TMC-M1C 225 MTR
C565	CU3035	Chip C.	CM105 W5R 102K 50VAT
C566	CU3011	Chip C.	CM105 CH 100D 50VAT
C567	CS0216	Chip Tantal	TMC-M1A 106 MTR
C568	CU3056	Chip C.	CM105 Y5V 473Z 25VAT
C569	CS0063	Chip Tantal	TMC 1V104 TR
C570	CS0063	Chip Tantal	TMC 1V104 TR
C571	CU3035	Chip C.	CM105 W5R 102K 50VAT
C584	CU3035	Chip C.	CM105 W5R 102K 50VAT
C585	CU3035	Chip C.	CM105 W5R 102K 50VAT
C586	CU3006	Chip C.	CM105 CH 050C 50VAT
C588	CU3035	Chip C.	CM105 W5R 102K 50VAT
C591	CU3035	Chip C.	CM105 W5R 102K 50VAT
C592	CU3035	Chip C.	CM105 W5R 102K 50VAT
C595	CU3064	Chip C.	CM105 CH 1R5C 50VAT
C596	CU3035	Chip C.	CM105 W5R 102K 50VAT
C600	CU3003	Chip C.	CM105 CH 020C 50VAT
TC401	CT0031	Trimmer	CTZ-05AW
TC402	CT0031	Trimmer	CTZ-05AW
TC403	CT0031	Trimmer	CTZ-05AW
TC404	CT0031	Trimmer	CTZ-05AW
TC405	CT0031	Trimmer	CTZ-05AW
TC406	CT0031	Trimmer	CTZ-05AW
R408	RK3034	Chip R.	MCR03 EZ0J 471
R409	RK3038	Chip R.	MCR03 EZ0J 102
R410	RK3072	Chip R.	MCR03 EZ0J 684
R411	RK3026	Chip R.	MCR03 EZ0J 101
R412	RK3038	Chip R.	MCR03 EZ0J 102
R413	RK3062	Chip R.	MCR03 EZ0J 104
R414	RK3026	Chip R.	MCR03 EZ0J 101
R415	RK3026	Chip R.	MCR03 EZ0J 101
R417	RK3062	Chip R.	MCR03 EZ0J 104
R418	RK3047	Chip R.	MCR03 EZ0J 562
R419	RK3052	Chip R.	MCR03 EZ0J 153
R420	RK3032	Chip R.	MCR03 EZ0J 331
R421	RK3010	Chip R.	MCR03 EZ0J 4R7
R422	RK3030	Chip R.	MCR03 EZ0J 221
R424	RK3044	Chip R.	MCR03 EZ0J 332
R425	RK3030	Chip R.	MCR03 EZ0J 221
R426	RK3050	Chip R.	MCR03 EZ0J 103
R427	RK3030	Chip R.	MCR03 EZ0J 331
R428	RK3010	Chip R.	MCR03 EZ0J 4R7
R430	RK3048	Chip R.	MCR03 EZ0J 682

Ref. No.	Parts No.	Description	Parts Name
R431	RK3054	Chip R.	MCR03 EZ0J 223
R432	RK3030	Chip R.	MCR03 EZ0J 221
R433	RK3038	Chip R.	MCR03 EZ0J 102
R434	RK3026	Chip R.	MCR03 EZ0J 101
R436	RK3014	Chip R.	MCR03 EZ0J 100
R437	RK3046	Chip R.	MCR03 EZ0J 472
R438	RK3038	Chip R.	MCR03 EZ0J 102
R440	RK3026	Chip R.	MCR03 EZ0J 101
R441	RK3044	Chip R.	MCR03 EZ0J 332
R442	RK3038	Chip R.	MCR03 EZ0J 102
R443	RK3050	Chip R.	MCR03 EZ0J 103
R444	RK3046	Chip R.	MCR03 EZ0J 472
R446	RK3062	Chip R.	MCR03 EZ0J 104
R447	RK3038	Chip R.	MCR03 EZ0J 102
R448	RK3030	Chip R.	MCR03 EZ0J 221
R449	RK3057	Chip R.	MCR03 EZ0J 393
R450	RK3050	Chip R.	MCR03 EZ0J 103
R451	RK3038	Chip R.	MCR03 EZ0J 102
R452	RK3054	Chip R.	MCR03 EZ0J 223
R453	RK3050	Chip R.	MCR03 EZ0J 103
R454	RK3053	Chip R.	MCR03 EZ0J 183
R455	RK3046	Chip R.	MCR03 EZ0J 472
R456	RK3054	Chip R.	MCR03 EZ0J 223
R457	RK3050	Chip R.	MCR03 EZ0J 103
R458	RK3038	Chip R.	MCR03 EZ0J 102
R459	RK3050	Chip R.	MCR03 EZ0J 103
R460	RK3050	Chip R.	MCR03 EZ0J 103
R461	RK3044	Chip R.	MCR03 EZ0J 332
R462	RK3058	Chip R.	MCR03 EZ0J 473
R463	RK3038	Chip R.	MCR03 EZ0J 102
R464	RK3062	Chip R.	MCR03 EZ0J 104
R465	RK3044	Chip R.	MCR03 EZ0J 332
R466	RK3026	Chip R.	MCR03 EZ0J 101
R467	RK3026	Chip R.	MCR03 EZ0J 101
R468	RK3026	Chip R.	MCR03 EZ0J 101
R469	RK3026	Chip R.	MCR03 EZ0J 101
R470	RK3026	Chip R.	MCR03 EZ0J 101
R471	RK3074	Chip R.	MCR03 EZ0J 105
R472	RK3059	Chip R.	MCR03 EZ0J 563
R473	RK3018	Chip R.	MCR03 EZ0J 220
R474	RK3026	Chip R.	MCR03 EZ0J 101
R475	RK3074	Chip R.	MCR03 EZ0J 105
R476	RK3074	Chip R.	MCR03 EZ0J 105
R477	RK3050	Chip R.	MCR03 EZ0J 103
R478	RK3056	Chip R.	MCR03 EZ0J 333
R479	RK3026	Chip R.	MCR03 EZ0J 101
R480	RK3038	Chip R.	MCR03 EZ0J 102
R481	RK3026	Chip R.	MCR03 EZ0J 101
R482	RK3034	Chip R.	MCR03 EZ0J 471
R483	RK3058	Chip R.	MCR03 EZ0J 473
R484	RK3030	Chip R.	MCR03 EZ0J 221
R485	RK3038	Chip R.	MCR03 EZ0J 102
R486	RK3038	Chip R.	MCR03 EZ0J 102
R487	RK3026	Chip R.	MCR03 EZ0J 101
R488	RK3038	Chip R.	MCR03 EZ0J 102
R489	RK3022	Chip R.	MCR03 EZ0J 470
R490	RK3046	Chip R.	MCR03 EZ0J 472
R491	RK3046	Chip R.	MCR03 EZ0J 472

Ref. No.	Parts No.	Description	Parts Name
R492	RK3030	Chip R.	MCR03 EZ0J 221
R493	RK3050	Chip R.	MCR03 EZ0J 103
R494	RK3054	Chip R.	MCR03 EZ0J 223
R495	RK3034	Chip R.	MCR03 EZ0J 471
R496	RK3050	Chip R.	MCR03 EZ0J 103
R497	RK3054	Chip R.	MCR03 EZ0J 223
R498	RK3054	Chip R.	MCR03 EZ0J 223
R499	RK3054	Chip R.	MCR03 EZ0J 223
R500	RK3058	Chip R.	MCR03 EZ0J 473
R501	RK3050	Chip R.	MCR03 EZ0J 103
R502	RK3058	Chip R.	MCR03 EZ0J 473
R503	RK3050	Chip R.	MCR03 EZ0J 103
R504	RK3050	Chip R.	MCR03 EZ0J 103
R505	RK3026	Chip R.	MCR03 EZ0J 101
R506	RK3054	Chip R.	MCR03 EZ0J 223
R507	RK3026	Chip R.	MCR03 EZ0J 101
R508	RK3038	Chip R.	MCR03 EZ0J 102
R509	RK3026	Chip R.	MCR03 EZ0J 101
R510	RK3038	Chip R.	MCR03 EZ0J 102
R511	RK3050	Chip R.	MCR03 EZ0J 103
R528	RK3054	Chip R.	MCR03 EZ0J 223
R529	RK3054	Chip R.	MCR03 EZ0J 223
R530	RK3050	Chip R.	MCR03 EZ0J 103
R531	RK3058	Chip R.	MCR03 EZ0J 473
R532	RK3058	Chip R.	MCR03 EZ0J 473
R533	RK3038	Chip R.	MCR03 EZ0J 102
R534	RK3054	Chip R.	MCR03 EZ0J 223
R535	RK3038	Chip R.	MCR03 EZ0J 102
R536	RK3074	Chip R.	MCR03 EZ0J 105
R537	RK3026	Chip R.	MCR03 EZ0J 101
R538	RK3038	Chip R.	MCR03 EZ0J 102
R539	RK3038	Chip R.	MCR03 EZ0J 102
R540	RK3034	Chip R.	MCR03 EZ0J 471
R541	RK3050	Chip R.	MCR03 EZ0J 103
R557	RK3054	Chip R.	MCR03 EZ0J 223
R558	RK3042	Chip R.	MCR03 EZ0J 222
R559	RK3050	Chip R.	MCR03 EZ0J 103
R560	RK3014	Chip R.	MCR03 EZ0J 100
R563	RK3022	Chip R.	MCR03 EZ0J 470
R570	RK3026	Chip R.	MCR03 EZ0J 101
VR401	RH0060	Trim. pot	MVR32HXBN 473
L401	QK0076	Coil	0.6 - 2 - 2.5T
L402	QK0036	Coil	0.6 - 3 - 1.5T
L403	QK0036	Coil	0.6 - 3 - 1.5T
L404	QK0036	Coil	0.6 - 3 - 1.5T
L405	QK0102	Coil	0.5 - 2.6 - 1.5T
L406	QK0102	Coil	0.5 - 2.6 - 1.5T
L407	QK0102	Coil	0.5 - 2.6 - 1.5T
L408	QK0102	Coil	0.5 - 2.6 - 1.5T
L409	QK0102	Coil	0.5 - 2.6 - 1.5T
L410	QC0003	Chip L.	MLF3216A 1R0M
L411	QK0063	Coil	0.5 - 3 - 3.5T
L412	QC0003	Chip L.	MLF3216A 1R0M
L413	QK0037	Coil	0.6 - 3 - 2.5T
L414	QK0036	Coil	0.6 - 3 - 1.5T
L415	QK0063	Coil	0.5 - 3 - 3.5T

Ref. No.	Parts No.	Description	Parts Name
L416	QK0095	Coil	0.5 - 2.2 - 2.5T
L417	QK0063	Coil	0.5 - 3 - 3.5T
L418	QA0065	IFT	BPF-T QA65
L419	QC0003	Chip L.	MLF3216A 1R0M
L420	QA0065	IFT	BPF-T QA65
L421	QA0065	IFT	BPF-T QA65
L422	QA0064	IFT	QA64
L423	QA0064	IFT	QA64
L424	QA0064	IFT	QA64
L425	QK0063	Coil	0.5 - 3 - 3.5T
L426	QC0003	Chip L.	MLF3216A 1R0M
L427	QC0009	Chip L.	MLF3216D R10M
L428	QC0215	Chip L.	MLF2012A 1R0K T
L435	QC0215	Chip L.	MLF2012A 1R0K T
IC401	XA0143	IC	M67749M (UHF)
IC402	XA0148	IC	M67748L (VHF)
IC403	XA0173	IC	MB1511 PFV-G-BND-EF
IC404	XA0173	IC	MB1511 PFV-G-BND-EF
D401	XD0230	Diode	DAN202U T106
D402	XD0129	Diode	1SS318 TT11
D403	XD0066	Diode	RLS135-TE-11
D404	XD0066	Diode	RLS135-TE-11
D408	XD0120	Diode	MA704WK TX
D409	XD0120	Diode	MA704WK TX
D410	XD0232	Diode	MA8027-L TX
D411	XD0066	Diode	RLS135-TE-11
D412	XD0066	Diode	RLS135-TE-11
D413	XD0132	Diode	1SV215 TPH4
D414	XD0132	Diode	1SV215 TPH4
D415	XD0132	Diode	1SV215 TPH4
D416	XD0230	Diode	DAN202U T106
D417	XD0130	Diode	DA204U T106
Q403	XT0096	Transistor	2SC4099T106N
Q404	XT0035	Transistor	2SC3429 T85R
Q405	XT0035	Transistor	2SC3429 T85R
Q406	XT0097	Transistor	2SC4393TE85L
Q407	XU0029	Transistor	DTC114YU
Q408	XT0030	Transistor	2SC3356 T1 BR25
Q409	XT0030	Transistor	2SC3356 T1 BR25
Q410	XT0030	Transistor	2SC3356 T1 BR25
Q411	XT0070	Transistor	FMS1 T98
Q412	XT0095	Transistor	2SC4081 T106R
Q413	XT0038	Transistor	2SA1037 KT146R
Q414	XT0095	Transistor	2SC4081T106R
Q415	XT0096	Transistor	2SC4099T106N
Q416	XT0030	Transistor	2SC3356 T1 BR25
Q417	XT0030	Transistor	2SC3356 T1 BR25
Q418	XE0015	FET	2SK302 YTE85
Q419	XU0029	Transistor	DTC114YU
Q420	XT0030	Transistor	2SC3356 T1 BR25
Q421	XT0030	Transistor	2SC3356 T1 BR25
Q422	XU0029	Transistor	DTC114YU
Q423	XU0029	Transistor	DTC114YU
Q428	XU0029	Transistor	DTC114YU

Ref. No.	Parts No.	Description	Parts Name
FB401	QB0008	Ferrite bead	HF30ACB201209-T
FB402	QB0008	Ferrite bead	HF30ACB201209-T
FB403	QB0008	Ferrite bead	HF30ACB201209-T
FB404	QB0008	Ferrite bead	HF30ACB201209-T
FB405	QB0008	Ferrite bead	HF30ACB201209-T
FB406	QB0008	Ferrite bead	HF30ACB201209-T
FB407	QB0008	Ferrite bead	HF30ACB201209-T
FB408	QB0008	Ferrite bead	HF30ACB201209-T
XF401	XF0008	Crystal Filter	23.05MHz UM-5 (E)
XF402	XF0003	Crystal Filter	55M15B1 (T)
X401	XQ0051	Crystal	UM1 12.8MHz
CN401	UE0039	Connector	TZL-P02P-A1
W401	UX1031	Wire	DJ580 W401
W402	UX1002	Wire	DJF5 W402
W403	MYDJH6AA	Wire	#26Y 2 - 6.5 - 2
W404	MKDJO8AA	Wire	#26Y 2 - 8 - 2
	UP0214C	PCB	DJF5 RF PCB-C
	TS0061		L Shield
	UF0047		Round Pin R9 X 10
	YZ0001		Silicon Grease

Ref. No.	Parts No.	Description	Parts Name
		IF Unit	
C101	CU3052	Chip C.	CM105 W5R 103K
C102	CU3052	Chip C.	CM105 W5R 103K
C103	CU3052	Chip C.	CM105 W5R 103K
C104	CU3009	Chip C.	CM105 CH 080C
C105	CU3012	Chip C.	CM105 CH 120K
C106	CS0211	Chip Tantal	TMC-M0J 336 TR
C107	CU3059	Chip C.	CM105 Y5V 104Z
C108	CU3059	Chip C.	CM105 Y5V 104Z
C109	CU3059	Chip C.	CM105 Y5V 104Z
C110	CU3021	Chip C.	CM105 CH 680K
C111	CU3059	Chip C.	CM105 Y5V 104Z
C112	CU3035	Chip C.	CM105 W5R 102K
C113	CU3026	Chip C.	CM105 CH 181K 50VAT
C114	CU3052	Chip C.	CM105 W5R 103K
C115	CU3054	Chip C.	CM105 W5R 223K
C116	CU3059	Chip C.	CM105 Y5V 104Z
C117	CU3019	Chip C.	CM105 CH 470K
C118	CU3052	Chip C.	CM105 W5R 103K
C119	CU3056	Chip C.	CM105 Y5V 473Z
C120	CU3059	Chip C.	CM105 Y5V 104Z
C121	CU3035	Chip C.	CM105 W5R 102K
C122	CU3056	Chip C.	CM105 Y5V 473Z
C123	CS0237	Chip Tantal	TMC-M1A 475 TR
C124	CU3059	Chip C.	CM105 Y5V 104Z
C125	CU3059	Chip C.	CM105 Y5V 104Z
C126	CS0237	Chip Tantal	TMC-M1A 475 TR
C127	CU3035	Chip C.	CM105 W5R 102K
C128	CU3035	Chip C.	CM105 W5R 102K
C129	CU3035	Chip C.	CM105 W5R 102K
C131	CU3052	Chip C.	CM105 W5R 103K
C132	CU3059	Chip C.	CM105 Y5V 104Z
C133	CS0049	Chip Tantal	TMC SA1C 105 MTR
C134	CU3024	Chip C.	CM105 CH 121K
C135	CU3059	Chip C.	CM105 Y5V 104Z
C136	CU3052	Chip C.	CM105 W5R 103K
C137	CU3019	Chip C.	CM105 CH 470K
C138	CU3013	Chip C.	CM105 CH 150K
C139	CU3006	Chip C.	CM105 CH 050C
C140	CU3035	Chip C.	CM105 W5R 102K
C141	CU3059	Chip C.	CM105 Y5V 104Z
C142	CU3059	Chip C.	CM105 Y5V 104Z
C143	CU3059	Chip C.	CM105 Y5V 104Z
C144	CS0211	Chip Tantal	TMC-M0J 336 TR
C145	CU3021	Chip C.	CM105 CH 680K
C146	CU3052	Chip C.	CM105 W5R 103K
C147	CU3054	Chip C.	CM105 W5R 223K
C148	CU3035	Chip C.	CM105 W5R 102K
C149	CU3026	Chip C.	CM105 CH 181K 50VAT
C150	CU3035	Chip C.	CM105 W5R 102K
C151	CU3019	Chip C.	CM105 CH 470K
C152	CU3052	Chip C.	CM105 W5R 103K
C153	CU3056	Chip C.	CM105 Y5V 473Z
C154	CU3059	Chip C.	CM105 Y5V 104Z
C155	CU3035	Chip C.	CM105 W5R 102K
C156	CU3056	Chip C.	CM105 Y5V 473Z
C157	CS0237	Chip Tantal	TMC-M1A 475 TR
C158	CU3059	Chip C.	CM105 Y5V 104Z

Ref. No.	Parts No.	Description	Parts Name
C159	CS0237	Chip Tantal	TMC-M1A 475 TR
C160	CU3059	Chip C.	CM105 Y5V 104Z
C161	CU3035	Chip C.	CM105 W5R 102K
C163	CU3059	Chip C.	CM105 Y5V 104Z
C164	CU3052	Chip C.	CM105 W5R 103K
C165	CU3059	Chip C.	CM105 Y5V 104Z
C166	CU3035	Chip C.	CM105 W5R 102K
C167	CU3059	Chip C.	CM105 Y5V 104Z
C169	CU3035	Chip C.	CM105 W5R 102K
C171	CU3035	Chip C.	CM105 W5R 102K
C172	CE0306	Electrolytic C.	ECEV 0JA 330R
C173	CS0210	Chip Tantal	TMC-M0J 156 TR
C174	CU3035	Chip C.	CM105 W5R 102K
C175	CE0313	Electrolytic C.	ECEV 1CA 220P
C176	CU3035	Chip C.	CM105 W5R 102K
C177	CS0210	Chip Tantal	TMC-M0J 156 TR
C178	CU3059	Chip C.	CM105 Y5V 104Z
C179	CS0210	Chip Tantal	TMC-M0J 156 TR
C180	CU3035	Chip C.	CM105 W5R 102K
C181	CS0237	Chip Tantal	TMC-M1A 475 TR
C182	CS0210	Chip Tantal	TMC-M0J 156 TR
C183	CU3035	Chip C.	CM105 W5R 102K
C184	CS0237	Chip Tantal	TMC-M1A 475 TR
C185	CS0049	Chip Tantal	TMC SA1C 105 MTR
C186	CU3035	Chip C.	CM105 W5R 102K
C187	CU3035	Chip C.	CM105 W5R 102K
C188	CU3052	Chip C.	CM105 W5R 103K
C189	CS0060	Chip Tantal	TMC SA1E 474 MTR
C190	CS0061	Chip Tantal	TMC 1V 224 TR
C191	CS0061	Chip Tantal	TMC 1V 224 TR
C192	CU3023	Chip C.	CM105 CH 101K
C193	CU3023	Chip C.	CM105 CH 101K
C194	CU3023	Chip C.	CM105 CH 101K
C195	CU3023	Chip C.	CM105 CH 101K
C200	CU3035	Chip C.	CM105 W5R 102K
C205	CU3035	Chip C.	CM105 W5R 102K
C206	CU3024	Chip C.	CM105 CH 121K
C207	CU3023	Chip C.	CM105 CH 101K
C208	CU3035	Chip C.	CM105 W5R 102K
C209	CU3035	Chip C.	CM105 W5R 102K
C210	CS0069	Chip Tantal	TMC 1V 154 TR
C211	CU3031	Chip C.	CM105 W5R 471K
C212	CU3031	Chip C.	CM105 W5R 471K
C213	CS0209	Chip Tantal	TMC-M0J 106 TR
C214	CS0209	Chip Tantal	TMC-M0J 106 TR
C215	CU3043	Chip C.	CM105 W5R 472K
C216	CU3019	Chip C.	CM105 CH 470K
C217	CU3052	Chip C.	CM105 W5R 103K
C218	CU3031	Chip C.	CM105 W5R 471K
C219	CU3031	Chip C.	CM105 W5R 471K
C220	CS0049	Chip Tantal	TMC SA1C 105 MTR
C221	CS0049	Chip Tantal	TMC SA1C 105 MTR
C222	CE0307	Electrolytic C.	ECEV 0JA 470P
C223	CU3035	Chip C.	CM105 W5R 102K
C224	CU3035	Chip C.	CM105 W5R 102K
C225	CE0307	Electrolytic C.	ECEV 0JA 470P
C226	CU3059	Chip C.	CM105 Y5V 104Z
C227	CU3059	Chip C.	CM105 Y5V 104Z

Ref. No.	Parts No.	Description	Parts Name
C228	CU3035	Chip C.	CM105 W5R 102K
C229	CE0307	Electrolytic C.	ECEV 0JA 470P
C230	CS0237	Chip Tantal	TMC-M1A 475 TR
C234	CU3029	Chip C.	CM105 W5R 331K 50VAT
C237	CS0209	Chip Tantal	TMC-M0J 106 TR
C238	CU3035	Chip C.	CM105 W5R 102K
C239	CU3035	Chip C.	CM105 W5R 102K
C240	CS0057	Chip Tantal	TMC 0J 225TR
C241	CU3092	Chip C.	CM105 CH 510J
C242	CU3092	Chip C.	CM105 CH 510J
C244	CS0211	Chip Tantal	TMC-M0J 336 TR
C245	CU3035	Chip C.	CM105 W5R 102K
C246	CU3035	Chip C.	CM105 W5R 102K
C247	CU3035	Chip C.	CM105 W5R 102K
C250	CU3059	Chip C.	CM105 Y5V 104Z
C251	CU3059	Chip C.	CM105 Y5V 104Z
C252	CU3059	Chip C.	CM105 Y5V 104Z
C253	CU3052	Chip C.	CM105 W5R 103K
C254	CU3023	Chip C.	CM105 CH 101K
C255	CU3035	Chip C.	CM105 W5R 102K
C260	CU3023	Chip C.	CM105 CH 101K
R101	RK3026	Chip R.	MCR03 EZ 0J 101
R102	RK3072	Chip R.	MCR03 EZ 0J 684
R103	RK3038	Chip R.	MCR03 EZ 0J 102
R104	RK3026	Chip R.	MCR03 EZ 0J 101
R105	RK3030	Chip R.	MCR03 EZ 0J 221
R106	RK3038	Chip R.	MCR03 EZ 0J 102
R107	RK3050	Chip R.	MCR03 EZ 0J 103
R108	RK3038	Chip R.	MCR03 EZ 0J 102
R109	RK3070	Chip R.	MCR03 EZ 0J 474
R110	RK3035	Chip R.	MCR03 EZ 0J 561
R111	RK3042	Chip R.	MCR03 EZ 0J 222
R112	RK3038	Chip R.	MCR03 EZ 0J 102
R113	RK3038	Chip R.	MCR03 EZ 0J 102
R114	RK3054	Chip R.	MCR03 EZ 0J 223
R115	RK3050	Chip R.	MCR03 EZ 0J 103
R116	RK3042	Chip R.	MCR03 EZ 0J 222
R117	RK3026	Chip R.	MCR03 EZ 0J 101
R118	RK3050	Chip R.	MCR03 EZ 0J 103
R119	RK3046	Chip R.	MCR03 EZ 0J 472
R120	RK3050	Chip R.	MCR03 EZ 0J 103
R121	RK3103	Chip R.	MCR03 EZ 0J 753
R122	RK3058	Chip R.	MCR03 EZ 0J 473
R123	RK3038	Chip R.	MCR03 EZ 0J 102
R124	RK3044	Chip R.	MCR03 EZ 0J 332
R125	RK3042	Chip R.	MCR03 EZ 0J 222
R126	RK3001	Chip R.	MCR03 EZ 0J 000
R127	RK3018	Chip R.	MCR03 EZ 0J 220
R128	RK3050	Chip R.	MCR03 EZ 0J 103
R129	RK3058	Chip R.	MCR03 EZ 0J 473
R130	RK3035	Chip R.	MCR03 EZ 0J 561
R131	RK3054	Chip R.	MCR03 EZ 0J 223
R132	RK3046	Chip R.	MCR03 EZ 0J 472
R133	RK3028	Chip R.	MCR03 EZ 0J 151
R134	RK3050	Chip R.	MCR03 EZ 0J 103
R135	RK3050	Chip R.	MCR03 EZ 0J 103
R136	RK3050	Chip R.	MCR03 EZ 0J 103

Ref. No.	Parts No.	Description	Parts Name
R137	RK3062	Chip R.	MCR03 EZ 0J 104
R140	RK3058	Chip R.	MCR03 EZ 0J 473
R141	RK3062	Chip R.	MCR03 EZ 0J 104
R142	RK3070	Chip R.	MCR03 EZ 0J 474
R143	RK3044	Chip R.	MCR03 EZ 0J 332
R144	RK3050	Chip R.	MCR03 EZ 0J 103
R145	RK3001	Chip R.	MCR03 EZ 0J 000
R146	RK3038	Chip R.	MCR03 EZ 0J 102
R147	RK3038	Chip R.	MCR03 EZ 0J 102
R148	RK3070	Chip R.	MCR03 EZ 0J 474
R149	RK3062	Chip R.	MCR03 EZ 0J 104
R150	RK3038	Chip R.	MCR03 EZ 0J 102
R151	RK3038	Chip R.	MCR03 EZ 0J 102
R152	RK3058	Chip R.	MCR03 EZ 0J 473
R153	RK3038	Chip R.	MCR03 EZ 0J 102
R154	RK3035	Chip R.	MCR03 EZ 0J 561
R155	RK3042	Chip R.	MCR03 EZ 0J 222
R156	RK3044	Chip R.	MCR03 EZ 0J 332
R157	RK3042	Chip R.	MCR03 EZ 0J 222
R158	RK3050	Chip R.	MCR03 EZ 0J 103
R159	RK3001	Chip R.	MCR03 EZ 0J 000
R160	RK3058	Chip R.	MCR03 EZ 0J 473
R161	RK3103	Chip R.	MCR03 EZ 0J 753
R162	RK3035	Chip R.	MCR03 EZ 0J 561
R163	RK3050	Chip R.	MCR03 EZ 0J 103
R164	RK3046	Chip R.	MCR03 EZ 0J 472
R165	RK3050	Chip R.	MCR03 EZ 0J 103
R166	RK3050	Chip R.	MCR03 EZ 0J 103
R167	RK3054	Chip R.	MCR03 EZ 0J 223
R168	RK3042	Chip R.	MCR03 EZ 0J 222
R169	RK3026	Chip R.	MCR03 EZ 0J 101
R170	RK3054	Chip R.	MCR03 EZ 0J 223
R171	RK3046	Chip R.	MCR03 EZ 0J 472
R172	RK3044	Chip R.	MCR03 EZ 0J 332
R173	RK3028	Chip R.	MCR03 EZ 0J 151
R174	RK3034	Chip R.	MCR03 EZ 0J 471
R176	RK3070	Chip R.	MCR03 EZ 0J 474
R177	RK3067	Chip R.	MCR03 EZ 0J 274
R178	RK3070	Chip R.	MCR03 EZ 0J 474
R179	RK3070	Chip R.	MCR03 EZ 0J 474
R180	RK3046	Chip R.	MCR03 EZ 0J 472
R181	RK3046	Chip R.	MCR03 EZ 0J 472
R182	RK3062	Chip R.	MCR03 EZ 0J 104
R183	RK3050	Chip R.	MCR03 EZ 0J 103
R184	RK3062	Chip R.	MCR03 EZ 0J 104
R185	RK3051	Chip R.	MCR03 EZ 0J 123
R186	RK3042	Chip R.	MCR03 EZ 0J 222
R187	RK3026	Chip R.	MCR03 EZ 0J 101
R188	RK3058	Chip R.	MCR03 EZ 0J 473
R189	RK3042	Chip R.	MCR03 EZ 0J 222
R190	RK3026	Chip R.	MCR03 EZ 0J 101
R191	RK3058	Chip R.	MCR03 EZ 0J 473
R192	RK3042	Chip R.	MCR03 EZ 0J 222
R193	RK3026	Chip R.	MCR03 EZ 0J 101
R194	RK3058	Chip R.	MCR03 EZ 0J 473
R195	RK3042	Chip R.	MCR03 EZ 0J 222
R196	RK3026	Chip R.	MCR03 EZ 0J 101
R197	RK3058	Chip R.	MCR03 EZ 0J 473

Ref. No.	Parts No.	Description	Parts Name
R198	RK3050	Chip R.	MCR03 EZ 0J 103
R199	RK3026	Chip R.	MCR03 EZ 0J 101
R200	RK3058	Chip R.	MCR03 EZ 0J 473
R202	RK3050	Chip R.	MCR03 EZ 0J 103
R203	RK3026	Chip R.	MCR03 EZ 0J 101
R204	RK3058	Chip R.	MCR03 EZ 0J 473
R206	RK3050	Chip R.	MCR03 EZ 0J 103
R207	RK3044	Chip R.	MCR03 EZ 0J 332
R208	RK3008	Chip R.	MCR03 EZ 0J 3R3
R209	RK3038	Chip R.	MCR03 EZ 0J 102
R210	RK3026	Chip R.	MCR03 EZ 0J 101
R211	RK3058	Chip R.	MCR03 EZ 0J 473
R212	RK3058	Chip R.	MCR03 EZ 0J 473
R213	RK3054	Chip R.	MCR03 EZ 0J 223
R214	RK3047	Chip R.	MCR03 EZ 0J 562
R216	RK3038	Chip R.	MCR03 EZ 0J 102
R217	RK3038	Chip R.	MCR03 EZ 0J 102
R218	RK3062	Chip R.	MCR03 EZ 0J 104
R219	RK3069	Chip R.	MCR03 EZ 0J 394
R220	RK3050	Chip R.	MCR03 EZ 0J 103
R221	RK3050	Chip R.	MCR03 EZ 0J 103
R222	RK3022	Chip R.	MCR03 EZ 0J 470
R223	RK3062	Chip R.	MCR03 EZ 0J 104
R224	RK3062	Chip R.	MCR03 EZ 0J 104
R225	RK3059	Chip R.	MCR03 EZ 0J 563
R226	RK3062	Chip R.	MCR03 EZ 0J 104
R227	RK3074	Chip R.	MCR03 EZ 0J 105
R228	RK3074	Chip R.	MCR03 EZ 0J 105
R229	RK3051	Chip R.	MCR03 EZ 0J 123
R230	RK3068	Chip R.	MCR03 EZ 0J 334
R231	RK3050	Chip R.	MCR03 EZ 0J 103
R232	RK3029	Chip R.	MCR03 EZ 0J 181
R233	RK3062	Chip R.	MCR03 EZ 0J 104
R234	RK3067	Chip R.	MCR03 EZ 0J 274
R235	RK3065	Chip R.	MCR03 EZ 0J 184
R236	RK3050	Chip R.	MCR03 EZ 0J 103
R237	RK3058	Chip R.	MCR03 EZ 0J 473
R238	RK0105	Chip R.	MCR10 EZ 0J 2R2
R239	RK3032	Chip R.	MCR03 EZ 0J 331
R240	RK3032	Chip R.	MCR03 EZ 0J 331
R241	RK3008	Chip R.	MCR03 EZ 0J 3R3
R242	RK3008	Chip R.	MCR03 EZ 0J 3R3
R243	RK3050	Chip R.	MCR03 EZ 0J 103
R244	RK3050	Chip R.	MCR03 EZ 0J 103
R245	RK3046	Chip R.	MCR03 EZ 0J 472
R246	RK3050	Chip R.	MCR03 EZ 0J 103
R247	RK3034	Chip R.	MCR03 EZ 0J 471
R248	RK3062	Chip R.	MCR03 EZ 0J 104
R249	RK3050	Chip R.	MCR03 EZ 0J 103
R250	RK3038	Chip R.	MCR03 EZ 0J 102
R251	RK3050	Chip R.	MCR03 EZ 0J 103
R252	RK3051	Chip R.	MCR03 EZ 0J 123
R253	RK3042	Chip R.	MCR03 EZ 0J 222
R254	RK3034	Chip R.	MCR03 EZ 0J 471
R255	RK3050	Chip R.	MCR03 EZ 0J 103
R256	RK3046	Chip R.	MCR03 EZ 0J 472
R257	RK3050	Chip R.	MCR03 EZ 0J 103
R258	RK3062	Chip R.	MCR03 EZ 0J 104

Ref. No.	Parts No.	Description	Parts Name
R259	RK3062	Chip R.	MCR03 EZ 0J 104
R260	RK3074	Chip R.	MCR03 EZ 0J 105
R261	RK3050	Chip R.	MCR03 EZ 0J 103
R263	RK3050	Chip R.	MCR03 EZ 0J 103
R264	RK3054	Chip R.	MCR03 EZ 0J 223
R265	RK3054	Chip R.	MCR03 EZ 0J 223
R266	RK3054	Chip R.	MCR03 EZ 0J 223
R267	RK3054	Chip R.	MCR03 EZ 0J 223
R268	RK3074	Chip R.	MCR03 EZ 0J 105
R269	RK3050	Chip R.	MCR03 EZ 0J 103
R270	RK3038	Chip R.	MCR03 EZ 0J 102
R271	RK3058	Chip R.	MCR03 EZ 0J 473
R272	RK3066	Chip R.	MCR03 EZ 0J 224
R273	RK3074	Chip R.	MCR03 EZ 0J 105
R274	RK3062	Chip R.	MCR03 EZ 0J 104
R275	RK3062	Chip R.	MCR03 EZ 0J 104
R276	RK3062	Chip R.	MCR03 EZ 0J 104
R277	RK3062	Chip R.	MCR03 EZ 0J 104
R278	RK3050	Chip R.	MCR03 EZ 0J 103
R279	RK3050	Chip R.	MCR03 EZ 0J 103
R280	RK3018	Chip R.	MCR03 EZ 0J 220
R281	RK3050	Chip R.	MCR03 EZ 0J 103
R285	RK3062	Chip R.	MCR03 EZ 0J 104
R286	RK3062	Chip R.	MCR03 EZ 0J 104
R287	RK3058	Chip R.	MCR03 EZ 0J 473
R288	RK3001	Chip R.	MCR03 EZ 0J 000
R289	RK3050	Chip R.	MCR03 EZ 0J 103
R290	RK3048	Chip R.	MCR03 EZ 0J 682
R291	RK3001	Chip R.	MCR03 EZ 0J 000
R292	RK3001	Chip R.	MCR03 EZ 0J 000
R293	RK3001	Chip R.	MCR03 EZ 0J 000
R294	RK3074	Chip R.	MCR03 EZ 0J 105
R295	RK3038	Chip R.	MCR03 EZ 0J 102
R296	RK3062	Chip R.	MCR03 EZ 0J 104
R297	RK3036	Chip R.	MCR03 EZ 0J 681
R298	RK3050	Chip R.	MCR03 EZ 0J 103
R300	RK3062	Chip R.	MCR03 EZ 0J 104
R301	RK3038	Chip R.	MCR03 EZ 0J 102
R302	RK3001	Chip R.	MCR03 EZ 0J 000
R303	RK3001	Chip R.	MCR03 EZ 0J 000
R304	RK3050	Chip R.	MCR03 EZ 0J 103
R305	RK3038	Chip R.	MCR03 EZ 0J 102
R306	RK3050	Chip R.	MCR03 EZ 0J 103
R307	RK1107	Chip R.	MCR18 EZ HJ 000E
R308	RK3050	Chip R.	MCR03 EZ 0J 103
R309	RK3058	Chip R.	MCR03 EZ 0J 473
VR103	RH0059	Trim. pot	MVR32 HXB N223
VR104	RH0059	Trim. pot	MVR32 HXB N223
VR105	RH0064	Trim. pot	MVR32HXBR N103
VR106	RH0064	Trim. pot	MVR32HXBR N103
VR107	RH0060	Trim. pot	MVR32HXBN 473
VR108	RH0060	Trim. pot	MVR32HXBN 473
VR109	RH0064	Trim. pot	MVR32HXBR N103
VR110	RH0094	Trim. pot	MVR32 474
VR111	RH0059	Trim. pot	MVR32 HXB N223

Ref. No.	Parts No.	Description	Parts Name
L101	QC0132	Chip L.	NL322522T-R68J-3
L102	QC0055	Chip L.	NL322522T-010M
L103	QC0039	Chip L.	NL322522T-1R0M
L104	QC0039	Chip L.	NL322522T-1R0M
L105	QC0039	Chip L.	NL322522T-1R0M
L106	QC0039	Chip L.	NL322522T-1R0M
IC101	XA0144	IC	TK10487MTR
IC102	XA0144	IC	TK10487MTR
IC103	XA0182	IC	S-81332HG-KC-T1
IC104	XA0172	IC	S-8053ALR-LJ-T1
IC105	XA0068	IC	M5218FP
IC106	XA0111	IC	NJM2073M
IC107	XA0184B	IC	HD4074719H (E)
IC107	XA0206	IC	HD4074719H (T)
IC108	XA0105	IC	MC145436
D101	XD0118	Diode	MA716
D102	XD0120	Diode	MA704WK
D103	XD0041	Diode	DAP202K
D104	XD0118	Diode	MA716
D105	XD0118	Diode	MA716
D106	XD0041	Diode	DAP202K
D108	XD0091	Diode	IMN10
D110	XD0129	Diode	1SS318
D111	XD0127	Diode	MA704WA TX
D113	XD0120	Diode	MA704WK
D116	XD0041	Diode	DAP202K
D117	XD0129	Diode	1SS318
D118	XD0232	Diode	MA8027-L TX
D119	XD0232	Diode	MA8027-L TX
D120	XD0129	Diode	1SS318
D121	XD0129	Diode	1SS318
Q101	XT0081	Transistor	2SC2714
Q102	XT0095	Transistor	2SC4081
Q103	XT0037	Transistor	2SC2412
Q104	XU0027	Transistor	FMA7
Q105	XU0002	Transistor	DTC114YK
Q106	XT0037	Transistor	2SC2412
Q107	XT0081	Transistor	2SC2714
Q108	XT0095	Transistor	2SC4081
Q109	XT0037	Transistor	2SC2412
Q110	XT0037	Transistor	2SC2412
Q111	XE0019	FET	2SJ144Y
Q112	XU0002	Transistor	DTC114YK
Q113	XU0002	Transistor	DTC114YK
Q114	XU0029	Transistor	DTC114YU
Q115	XT0037	Transistor	2SC2412
Q116	XT0088	Transistor	2SA1213
Q117	XU0020	Transistor	FMW1
Q118	XT0088	Transistor	2SA1213
Q119	XU0020	Transistor	FMW1
Q120	XT0088	Transistor	2SA1213
Q121	XU0020	Transistor	FMW1
Q122	XT0088	Transistor	2SA1213
Q123	XU0020	Transistor	FMW1
Q124	XT0038	Transistor	2SA1037

Ref. No.	Parts No.	Description	Parts Name
Q125	XU0020	Transistor	FMW1
Q126	XT0038	Transistor	2SA1037
Q127	XU0020	Transistor	FMW1
Q128	XT0088	Transistor	2SA1213
Q129	XU0020	Transistor	FMW1
Q130	XU0028	Transistor	FMC2
Q131	XU0029	Transistor	DTC114YU
Q132	XU0002	Transistor	DTC114YK
Q133	XT0038	Transistor	2SA1037
Q134	XU0002	Transistor	DTC114YK
Q135	XU0002	Transistor	DTC114YK
Q136	XU0019	Transistor	DTA114YK
Q137	XU0002	Transistor	DTC114YK
Q138	XU0012	Transistor	DTC114EK
Q139	XT0037	Transistor	2SC2412
Q140	XU0026	Transistor	FMG2
Q141	XU0002	Transistor	DTC114YK
Q142	XE0019	FET	2SJ144Y
Q143	XU0001	Transistor	DTC143TK
Q144	XU0029	Transistor	DTC114YU
X101	XQ0043	Crystal	UM-5 22.595MHz (E)
X102	XK0002	Discriminator	CDBM455C7
X103	XQ0039	Crystal	UM-5 54.595MHz (T)
X104	XK0002	Discriminator	CDBM455C7
X105	XB0007	Crystal	CSAC 2.00MGC-TC
X106	XB0001	Crystal	C4CA 03580000K01R
FL101	XC0004	Filter	CFUM 455E
FL102	XC0004	Filter	CFUM 455E
CN101	UE0037	Connector	TZL-P10P-A1
CN102	UE0139	Connector	TZL-P11P-A1
CN103	UE0129	Connector	DF9A-9S-1V
W101	UX1003	Wire	DJF5W3
W102	MTDJ06AA	Wire	#26T 2 - 6 - 2
W103	UP0217	PCB	Flexible Printed Circuit Board
W104	MRDJH4AA	Wire	#26R02 -045 -02
	RV0014	Pot. meter	RK09722115R1211 (10KB x 2)
	RV0015	Pot. meter	RK0972210 (10KB x 2)
	UR0006	Encoder	EC09P20-51
	ED0002	Battery	Lithium Battery BR1225-1VF
	UP0215B	PCB	IF Circuit Board B
	TZ0021		Insulator
	TZ0048		Lithium Battery Insulator
	TZ0056		VCO Shield K1
	TS0073		CPU Shield F5

Ref. No.	Parts No.	Description	Parts Name
SW Unit			
SW601	UU0013	Switch	SKHUAB
SW602	UU0013	Switch	SKHUAB
SW603	UU0013	Switch	SKHUAB
R604	RK3001	Chip R.	MCR03 EZ0J 000 (T/TD only)
R606	RK3001	Chip R.	MCR03 EZ0J 000 (E/ED only)
C608	CU3035	Chip C.	CM105 W5R 102K 50VAT
C609	CU3035	Chip C.	CM105 W5R 102K 50VAT
C610	CU3035	Chip C.	CM105 W5R 102K 50VAT

Ref. No.	Parts No.	Description	Parts Name
870 Unit			
Q401	XT0030	Transistor	2SC3356 T1BR25
Q402	XT0030	Transistor	2SC3356 T1BR25
C401	CU3006	Chip C.	CM105 CH 050C 50VAT
C402	CU3002	Chip C.	CM105 CH 010C 50VAT
C403	CU3005	Chip C.	CM105 CH 040C 50VAT
C404	CU3004	Chip C.	CM105 CH 030C 50VAT
C405	CU3035	Chip C.	CM105 W5R 102K 50VAT
C406	CU3006	Chip C.	CM105 CH 050C 50VAT
C407	CU3005	Chip C.	CM105 CH 040C 50VAT
C408	CU3003	Chip C.	CM105 CH 020C 50VAT
C409	CU3005	Chip C.	CM105 CH 040C 50VAT
C410	CU3006	Chip C.	CM105 CH 050C 50VAT
C411	CU3003	Chip C.	CM105 CH 020C 50VAT
C412	CU3003	Chip C.	CM105 CH 020C 50VAT
C413	CU3035	Chip C.	CM105 W5R 102K 50VAT
C598	CU3035	Chip C.	CM105 W5R 102K 50VAT
R401	RK3046	Chip R.	MCR03 EZ0J 472
R402	RK3052	Chip R.	MCR03 EZ0J 153
R403	RK3032	Chip R.	MCR03 EZ0J 331
R404	RK3026	Chip R.	MCR03 EZ0J 101
R406	RK3068	Chip R.	MCR03 EZ0J 334
R407	RK3042	Chip R.	MCR03 EZ0J 222

Ref. No.	Parts No.	Description	Parts Name
Jack Unit			
JK601	UJ0019	Jack	HSJ1423-01-010
JK602	UJ0019	Jack	HSJ1423-01-010
JK603	UJ0022	Jack	HSJ1102-01-540
R601	RK3050	Chip R.	MCR03 EZ0J 103
R602	RK3026	Chip R.	MCR03 EZ0J 101
R605	RK3050	Chip R.	MCR03 EZ0J 103
C601	CU3035	Chip C.	CM105 W5R 102K
C602	CU3035	Chip C.	CM105 W5R 102K
C603	CU3035	Chip C.	CM105 W5R 102K
C604	CU3035	Chip C.	CM105 W5R 102K
C605	CU3035	Chip C.	CM105 W5R 102K
C606	CU3035	Chip C.	CM105 W5R 102K
C607	CU3035	Chip C.	CM105 W5R 102K
D601	XD0120	Diode	MA704WK

Ref. No.	Parts No.	Description	Parts Name
		Battery Case	
	KD0023		Battery Case
	KF0019		Battery Case
	SD0006A		Terminal B
	SD0007A		Terminal C
	SD0012		Plus Terminal
	SD0013		Minus Terminal
	SD0014		Plus Terminal
	SD0015		Minus Terminal
	PR0146		Caution Lavel

Ref. No.	Parts No.	Description	Parts Name
		Others	
	KM0120		Front Case
	KB0036		Rear Case
	FG0085		Ten Key
	FG0086		Sub Key
	FG0080		DC Jack Cover
	FG0081		Rubber Shield
	FG0082		PTT Rubber
	NB0043		Release Knob
	FP0054		Terminal Base
	DP0062		LCD Panel
	FG0078		SP Rubber
	FG0079		MIC Rubber
	YZ0113		Panel Tape
	YZ0058		Cop. Wire 0.4 1mm
	TG0012		SP Net
	AN0012		Dial Nut
	UE0029A		BNC Receptacle
	NK0024A		VOL Knob
	NK0025		Dial Knob
	NW0007		SQL Knob
	UR0006		Pulse SW
	TS0060		LCD Earth Plate A
	TS0062		LCD Earth Plate B
	TS0043		Terminal Earth Plate
	TS0069		Earth Plate
	UT0024		Terminal
	ST0029		SP Holder
	FM0056		Terminal Base Plate
	SS0050		VOL Angle
	TS0059		IF Shield
	TS0065		ANT Shield
	SA0011		Angle Boss
	SA0010		IF Boss
	AS0155		Screw Set
	YZ0044		Screw Lock 1401C
	TS0066		Flex Shield
	YZ0041		Cop. Tape Width 8mm
	YZ0013		Hot Melt TC3764 (3M) 1G x 1

Ref. No.	Parts No.	Description	Parts Name
		Packing	
			Battery Case (TD/ED only)
	BH0008A		Belt Hook
	AA0020		
			Bottom Cover
	EA0021		Antenna
	PH0004		Registration Card
	PS0151		Instruction Manual
	PT0004A		Lot Number Seal
	PK0033		Schematic Diagram
	PR0094		Seal (DJ580TA only)
	HK0265		Item Carton Box (DJ580T)
	HK0266		Item Carton Box (DJ580E)
	HK0267		Item Carton Box (DJ580TD)
	HK0268		Item Carton Box (DJ580ED)
	HH0030		Polystyrene Foamed Fixture
	HH0031		Polystyrene Plate
	HH0036		Polystyrene Plate
	DS0225		Model Name Plate (DJ580T)
	DS0226		Model Name Plate (DJ580E)
	DS0227		Model Name Plate (DJ580TD)
	DS0228		Model Name Plate (DJ580ED)
	DS0240		Model Name Plate (DJ580TA)
	HM0092		10 sets Carton Box (DJ580T)
	HM0093		10 sets Carton Box (DJ580TD)
	HH0037		Carton Cushion (DJ580T)
	HH0038		Carton Cushion (DJ580TD)
	EG0014		Ni-Cd Battery Pack (T/E/TA)
	EDC-24		(DJ580T only)
	EDC-25A		(DJ580E/TA only)
	HP0031	Protection	Unit 100 x 200
		Bag	
	HP0028		(Instruction Manual) 165 x 280
		Screw List	
	AF0008	Screw	2 + 3.5 Fe Ni
	AF0018	Screw	2 + 4 Fe BC
	AF0016	Screw	2 + 2 Fe BC
	AF0020	Screw	2 + 3 Fe Ni
	AF0014	Screw	2.6 + 3.5 Fe Ni
	AF0001	Screw	2.6 + 6 Fe
	AP0003	Screw	P 2 + 16 Fe BC

Ref. No.	Parts No.	Description	Parts Name
		CTCSS Unit	
IC701	XA0163	IC	MX365LG-TR
Q701	XT0037	Transistor	2SC2412L T96R
D701	XD0040	Diode	DAN202K T96R
VR701	RH0060	Trim. pot	MVR32 HXBRN473
X701	XB0006	Cristal	CSB1000J 221
CN701	UE0132	Connector	DF9A-9P-AV(22)
C701	CU3060	Chip C.	CM105 CH 221K
C702	CU3060	Chip C.	CM105 CH 221K
C703	CU3059	Chip C.	CM105 Y5V 104Z
C704	CU3047	Chip C.	CM105 W5R 103K
C705	CS0060	Chip Tantal	TMC 1E 474TR
C706	CS0060	Chip Tantal	TMC 1E 474TR
C707	CU3047	Chip C.	CM105 W5R 103K
C708	CU3059	Chip C.	CM105 Y5V 104Z
C709	CU3059	Chip C.	CM105 Y5V 104Z
C710	CU3059	Chip C.	CM105 Y5V 104Z
C711	CS0060	Chip Tantal	TMC 1E 474TR
R701	RK3074	Chip R.	MCR03 EZHJ 105
R702	RK3064	Chip R.	MCR03 EZHJ 154
R703	RK3040	Chip R.	MCR03 EZHJ 152
R704	RK3022	Chip R.	MCR03 EZHJ 470
R705	RK3067	Chip R.	MCR03 EZHJ 274
R706	RK3059	Chip R.	MCR03 EZHJ 563
R707	RK3074	Chip R.	MCR03 EZHJ 105
R708	RK3073	Chip R.	MCR03 EZHJ 824
R709	RK3038	Chip R.	MCR03 EZHJ 102
R710	RK3070	Chip R.	MCR03 EZHJ 474
	UP0213		Tone Squelch Unit
	YZ0042		Adhesion

Adjustment

1) Required Test Equipment

1. Regulated Power Supply

Supply voltage: 2V to 15V
Current: 2A or more.
Standard voltage: 13.8V

2. Frequency Counter

Measurable frequency: Up to 1GHz
Measurements stability: 0.2ppm or so

3. Power Meter

Measurable frequency: Up to 500MHz.
Impedance: 50Ω, unbalanced.
Measuring range: Full scale of 100W or so.

4. Linear Detector

Measurable frequency: Up to 500MHz.
Characteristics: Flat
CN: 60dB or more.

5. Digital Multimeter

Voltage range: FS = 18V or so.
Input resistance: 1MΩ or more.

6. Oscilloscope

Measurable frequency: DC to 30MHz.

7. AF Voltmeter

Measurable frequency: 50Hz to 1MHz.
Maximum sensitivity: 1mV or more.

8. Spectrum Analyzer

Measuring range: DC to 2GHz or more.

9. SSG

Maximum frequency: 1GHz or more.
Output: -20dB/0.1μV to 120dB/1V.
Output Impedance: 50Ω, unbalanced.

10. Dummy Load

Impedance: 8Ω
Dissipation: 100W or more.

11. Distortion Meter

Measurable frequency: 30Hz to 100KHz.
Input level: 50mV to 10V rms.

2) Adjustment for DJ580T/TD

TX-RX Common Adjustment

Item	Condition	Measurement		Adjustment			Specifications/ Remarks
		Test-equipment	Terminal	Unit	Parts	Method	
Backup Voltage	Power off	Digital multimeter	D116 TP3			Check	2.8V or more

PLL Adjustment

Item	Condition	Measurement		Adjustment			Specifications/ Remarks
		Test-equipment	Terminal	Unit	Parts	Method	
Reference Frequency	Frequency: 445.00MHz PTT: ON	Frequency Counter	ANT	RF	TC406		445.00000MHz
UHF TX VCO	Frequency: 445.00MHz PTT: ON Power: Middle	Digital multimeter	TP1	U-VCO	L433		1.5 ~ 1.7V
UHF RX VCO	Frequency: 445.00MHz	Digital multimeter	TP1	U-VCO	L432		1.8 ~ 2.2V
VHF VCO	Frequency: 145.00MHz	Digital multimeter	TP2	V-VCO	L441		2.0 ~ 2.1V

RX Adjustment

Item	Condition	Measurement		Adjustment			Specifications/ Remarks
		Test-equipment	Terminal	Unit	Parts	Method	
Receive Sensitivity	Freq: 445.05MHz SSG mod: 1KHz Power Supply Voltage: 6V	SSG Oscilloscope AF Voltmeter Distortion meter	SP	RF	TC401 ~ TC405	12dB SINAD: MAX	12dB SINAD -7.5dbμV (EMF)
	Freq: 145.05MHz SSG mod: 1KHz Power Supply Voltage: 6V			RF	L422, L424 ~ L428	12dB SINAD: MAX	12dB SINAD -7.5dbμV (EMF)
S Meter	Freq: 445.05MHz SSG output: 15dBμV (EMF)			IF	VR103	Full	+10 ~ +25dBμV (EMF)
	Freq: 145.05MHz SSG output: 15dBμV (EMF)			IF	VR104	Full	+10 ~ +25dBμV (EMF)

TX Adjustment

Item	Condition	Measurement		Adjustment			Specifications/ Remarks
		Test-equipment	Terminal	Unit	Parts	Method	
Power	1) Before adjustment	Power meter Spectrum Analyzer	ANT	IF	VR109	MAX	
	2) Freq: 445.00MHz PTT: ON Power: High			RF	L402		spurious below -60dBc
	3) Freq: 445.00MHz PTT: ON Power: High			IF	VR109		5.0 ~ 5.3W
	4) Freq: 445.00MHz PTT: ON Power: Middle			IF	VR108		1.0W
	5) Freq: 445.00MHz PTT: ON Power: Low			IF	VR110		0.1 ~ 0.25W
	6) Freq: 145.00MHz PTT: ON Power: High			RF	VR401		5.0 ~ 5.3W
	7) Freq: 145.00MHz PTT: ON Power: Middle					Check	0.8 ~ 1.5W
	8) Freq: 145.00MHz PTT: ON Power: Low					Check	0.1 ~ 0.6W
DEV	1) Freq: 445.00MHz AG output: 1KHz, -30dBm PTT: ON Power: Low	Power meter AG Liner detector	ANT	IF	VR105		4.7KHz/DEV
	2) Freq: 145.00MHz AG output: 1KHz, -30dBm PTT: ON Power: Low			IF	VR106		4.7KHz/DEV
DTMF	Freq: 445.00MHz PTT: ON Power: Low Push "1" key on keypad			IF	VR107		3KHz/DEV
CTCSS (88.5Hz)	Freq: 445.00MHz PTT: ON Power: Low with Tone SQL Unit			Tone SQL	VR701		800Hz/DEV

3) Adjustment for DJ580E/ED

TX-RX Common Adjustment

Item	Condition	Measurement		Adjustment			Specifications/ Remarks
		Test-equipment	Terminal	Unit	Parts	Method	
Backup Voltage	Power off	Digital multimeter	D116 TP3			Check	2.8V or more

PLL Adjustment

Item	Condition	Measurement		Adjustment			Specifications/ Remarks
		Test-equipment	Terminal	Unit	Parts	Method	
Reference Frequency	Frequency: 435.00MHz PTT: ON	Frequency Counter	ANT	RF	TC406		435.00000MHz ±100Hz
UHF TX VCO	Frequency: 435.00MHz PTT: ON Power: Middle	Digital multimeter	TP1	U-VCO	L433		1.3 ~ 1.8V
UHF RX VCO	Frequency: 435.00MHz		TP1	U-VCO	L432		1.8 ~ 2.2V
VHF VCO	Frequency: 145.00MHz		TP2	V-VCO	L441		2.0 ~ 2.1V

RX Adjustment

Item	Condition	Measurement		Adjustment			Specifications/ Remarks
		Test-equipment	Terminal	Unit	Parts	Method	
Receive Sensitivity	Freq: 435.05MHz SSG mod: 1KHz Power Supply Voltage: 6V	SSG Oscilloscope AF Voltmeter Distortion meter	SP	RF	TC401 ~ TC405	12dB SINAD: MAX	12dB SINAD -7.5dBμV (EMF)
	Freq: 145.05MHz SSG mod: 1KHz Power Supply Voltage: 6V			RF	L422, L424 ~ L428	12dB SINAD: MAX	12dB SINAD -7.5dBμV (EMF)
S Meter	Freq: 435.05MHz SSG output: 15dBμV (EMF)			IF	VR103	Full	+10 ~ +25dBμV (EMF)
	Freq: 145.05MHz SSG output: 15dBμV (EMF)			IF	VR104	Full	+10 ~ +25dBμV (EMF)

TX Adjustment

Item	Condition	Measurement		Adjustment			Specifications/ Remarks
		Test-equipment	Terminal	Unit	Parts	Method	
Power	1) Before adjustment	Power meter Spectrum Analyzer	ANT	IF	VR109	MAX	
	2) Freq: 435.00MHz PTT: ON Power: High			RF	L402		spurious below -60dBc
	3) Freq: 435.00MHz PTT: ON Power: High			IF	VR109		5.0 ~ 5.3W
	4) Freq: 435.00MHz PTT: ON Power: Middle			IF	VR108		1.0W
	5) Freq: 435.00MHz PTT: ON Power: Low			IF	VR110		0.1 ~ 0.25W
	6) Freq: 145.00MHz PTT: ON Power: High			RF	VR401		5.0 ~ 5.3W
	7) Freq: 145.00MHz PTT: ON Power: Middle					Check	0.8 ~ 1.5W
	8) Freq: 145.00MHz PTT: ON Power: Low					Check	0.1 ~ 0.6W
DEV	1) Freq: 435.00MHz AG output: 1KHz, -30dBm PTT: ON Power: Low	Power meter AG Liner detector	ANT	IF	VR105		4.5KHz/DEV
	2) Freq: 145.00MHz AG output: 1KHz, -30dBm PTT: ON Power: Low			IF	VR106		4.5KHz/DEV
DTMF	Freq: 435.00MHz PTT: ON Power: Low Push "1" Key on keypad			IF	VR107		3KHz/DEV
1750Hz Tone	Freq: 435.00MHz PTT: ON Power: Low			IF	VR111		3KHz/DEV

4) Adjustment Points

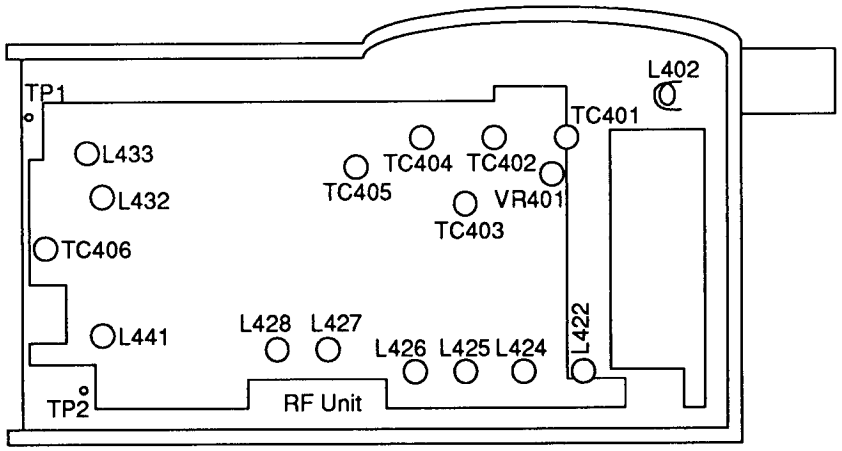

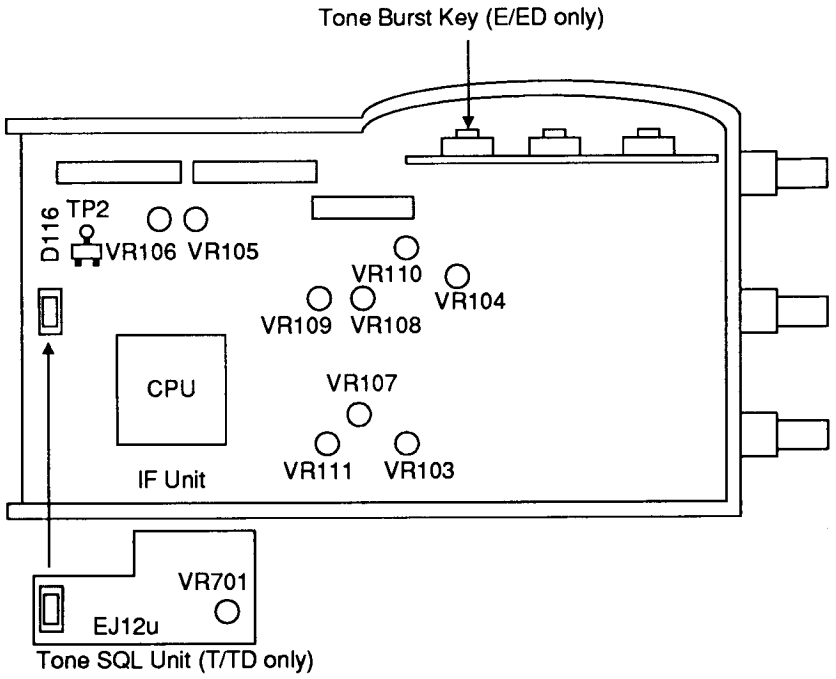

Block Diagram

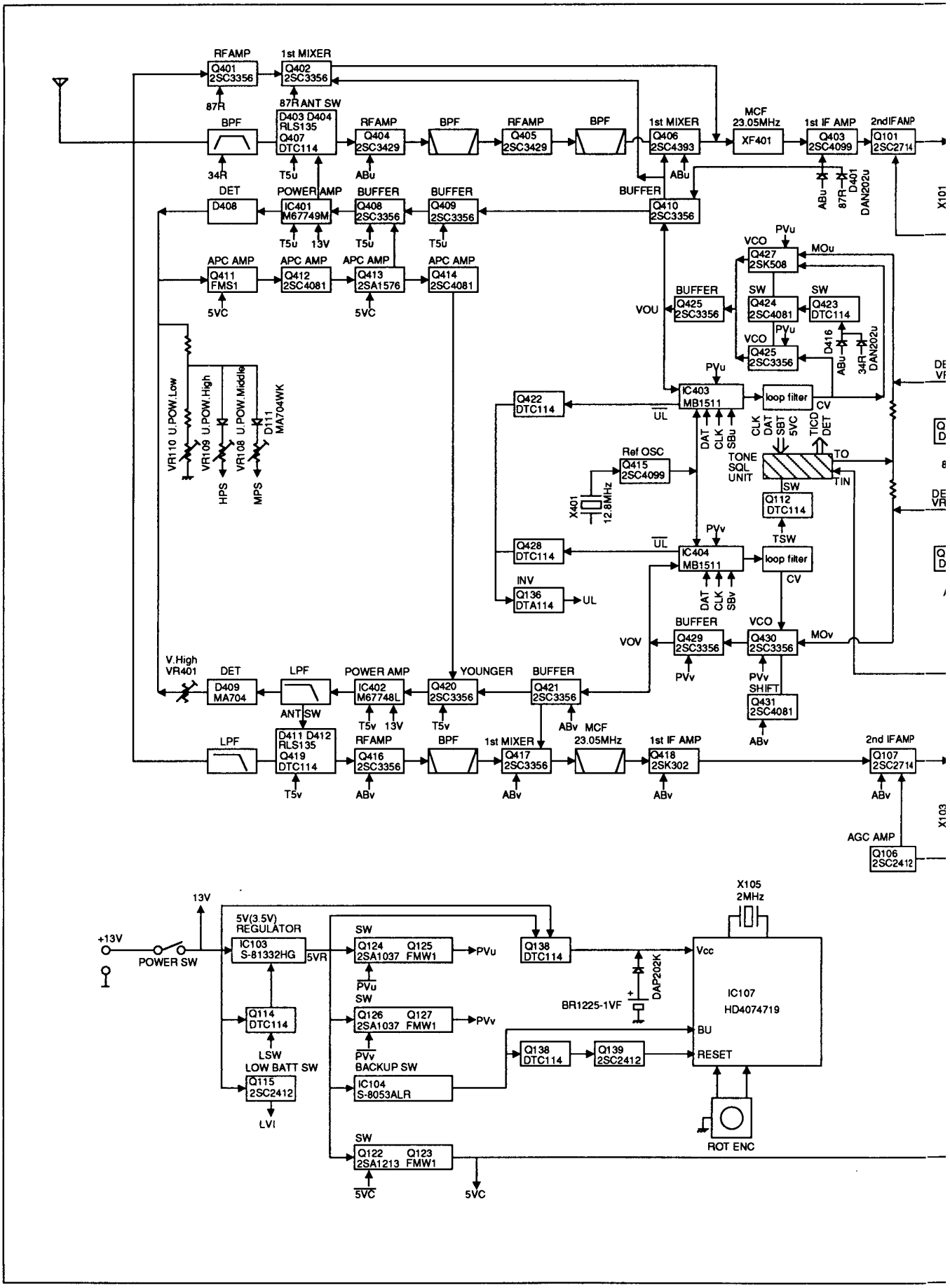

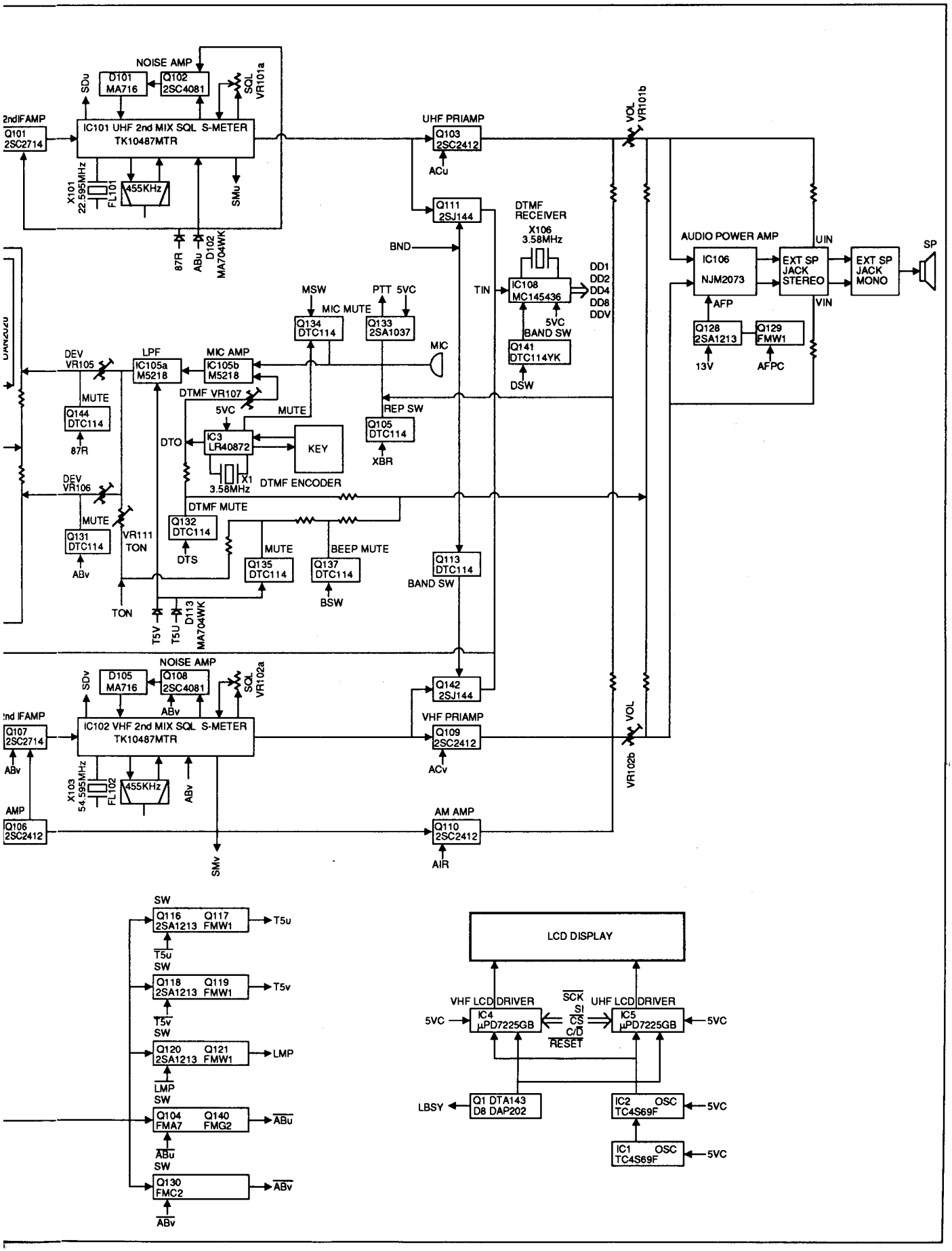
NOISE AMP
D101 MA716
Q102 2SC4081
SQL VR101a
SDu
2ndIFAMP
Q101 2SC2714
IC101 UHF 2nd MIX SQL S-METER TK10487MTR
X101 22.595MHz
FL101
455KHz
SMu
87R
ABu
D102 MA704WK
UHF PRIAMP
Q103 2SC2412
ACu
VOL VR101b
Q111 2SJ144
DTMF RECEIVER
X106 3.58MHz
BND
DD1
DD2
DD4
DD8
DDV
TIN
IC108 MC145436
5VC
BAND SW
Q141 DTC114YK
DSW
AUDIO POWER AMP
IC106 NJM2073
AFP
13V
Q128 2SA1213
Q129 FMW1
AFPC
UIN
VIN
EXT SP JACK STEREO
EXT SP JACK MONO
SP
MSW
PTT 5VC
MIC MUTE
Q134 DTC114
Q133 2SA1037
MIC
DEV VR105
LPF
IC105a M5218
MIC AMP
IC105b M5218
DTMF VR107
MUTE
Q144 DTC114
87R
REP SW
Q105 DTC114
XBR
DTO
IC3 LR40872
KEY
X1 3.58MHz
DTMF ENCODER
DEV VR106
DTMF MUTE
Q131 DTC114
VR111 TON
ABv
Q132 DTC114
DTS
Q135 DTC114
BEEP MUTE
Q137 DTC114
BSW
Q113 DTC114
BAND SW
TON
T5V
T5U
D113 MA704WK
NOISE AMP
D105 MA716
Q108 2SC4081
SQ VR102a
SDv
ABv
2nd IFAMP
Q107 2SC2714
IC102 VHF 2nd MIX SQL S-METER TK10487MTR
X103 54.595MHz
FL102
455KHz
AMP
Q106 2SC2412
SMv
Q142 2SJ144
VHF PRIAMP
Q109 2SC2412
ACv
VOL VR102b
AM AMP
Q110 2SC2412
AIR
SW
Q116 Q117 2SA1213 FMW1
T5u
Q118 Q119 2SA1213 FMW1
T5v
Q120 Q121 2SA1213 FMW1
LMP
Q104 Q140 FMA7 FMG2
ABu
Q130 FMC2
ABv
LCD DISPLAY
VHF LCD DRIVER
UHF LCD DRIVER
SCK
SI
CS
C/D
RESET
IC4 µPD7225GB
IC5 µPD7225GB
5VC
LBSY
Q1 DTA143 D8 DAP202
IC2 OSC TC4S69F
IC1 OSC TC4S69F

Circuit Diagrams

1) LCD Unit

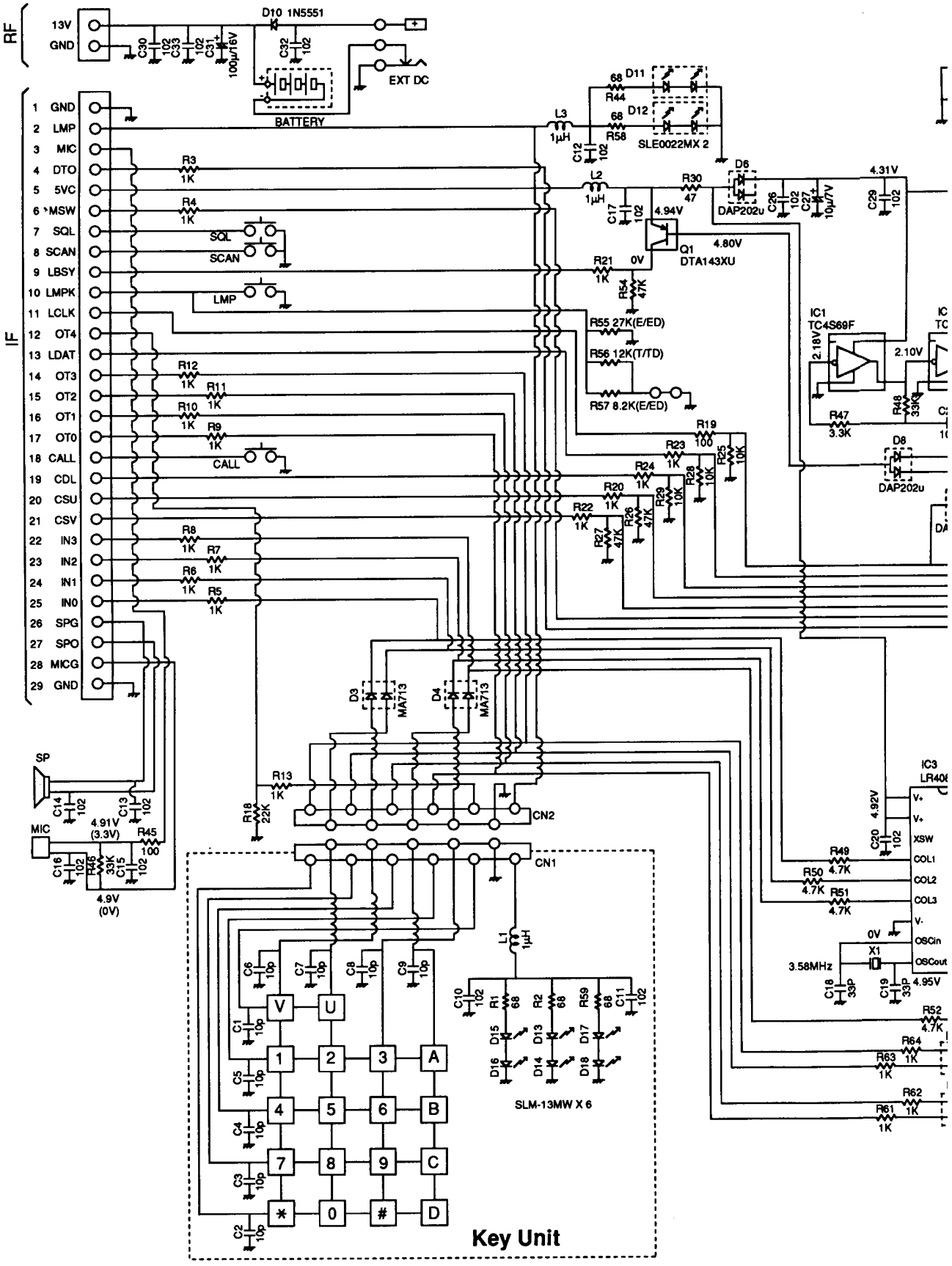

4p0217

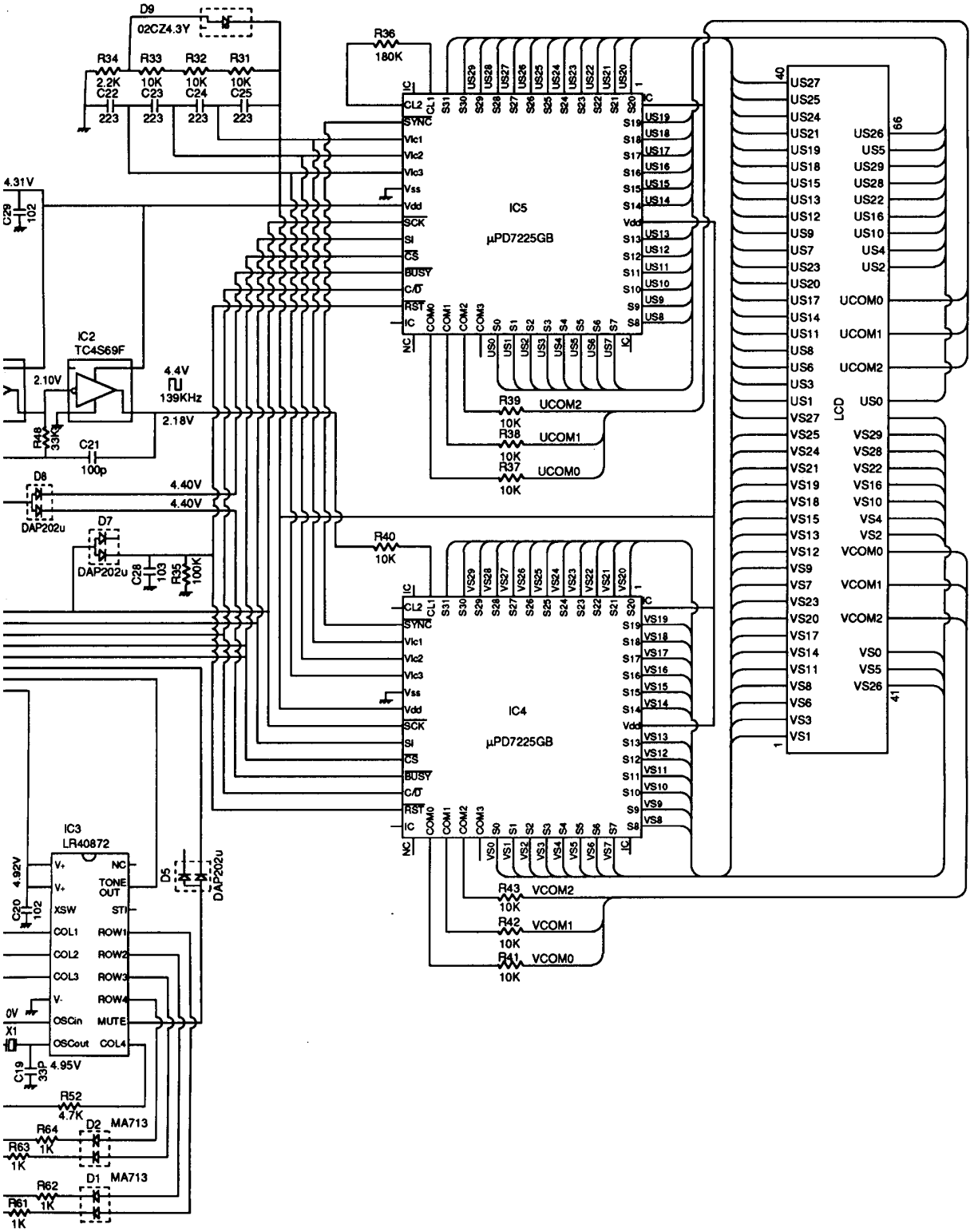
D9
02CZ4.3Y
R34
2.2K
C22
223
R33
10K
C23
223
R32
10K
C24
223
R31
10K
C25
223
R36
180K
IC5
µPD7225GB
IC4
µPD7225GB
IC2
TC4S69F
4.31V
C29
102
2.10V
4.4V
139KHz
2.18V
R48
33K
C21
100p
D8
DAP202u
4.40V
4.40V
D7
DAP202u
C28
103
R35
100K
R40
10K
R39
10K
UCOM2
R38
10K
UCOM1
R37
10K
UCOM0
R43
10K
VCOM2
R42
10K
VCOM1
R41
10K
VCOM0
LCD
IC3
LR40872
4.92V
C20
102
D5
DAP202u
0V
X1
C19
33p
4.95V
R52
4.7K
R64
1K
D2
MA713
R63
1K
R62
1K
D1
MA713
R61
1K

2) RF Unit

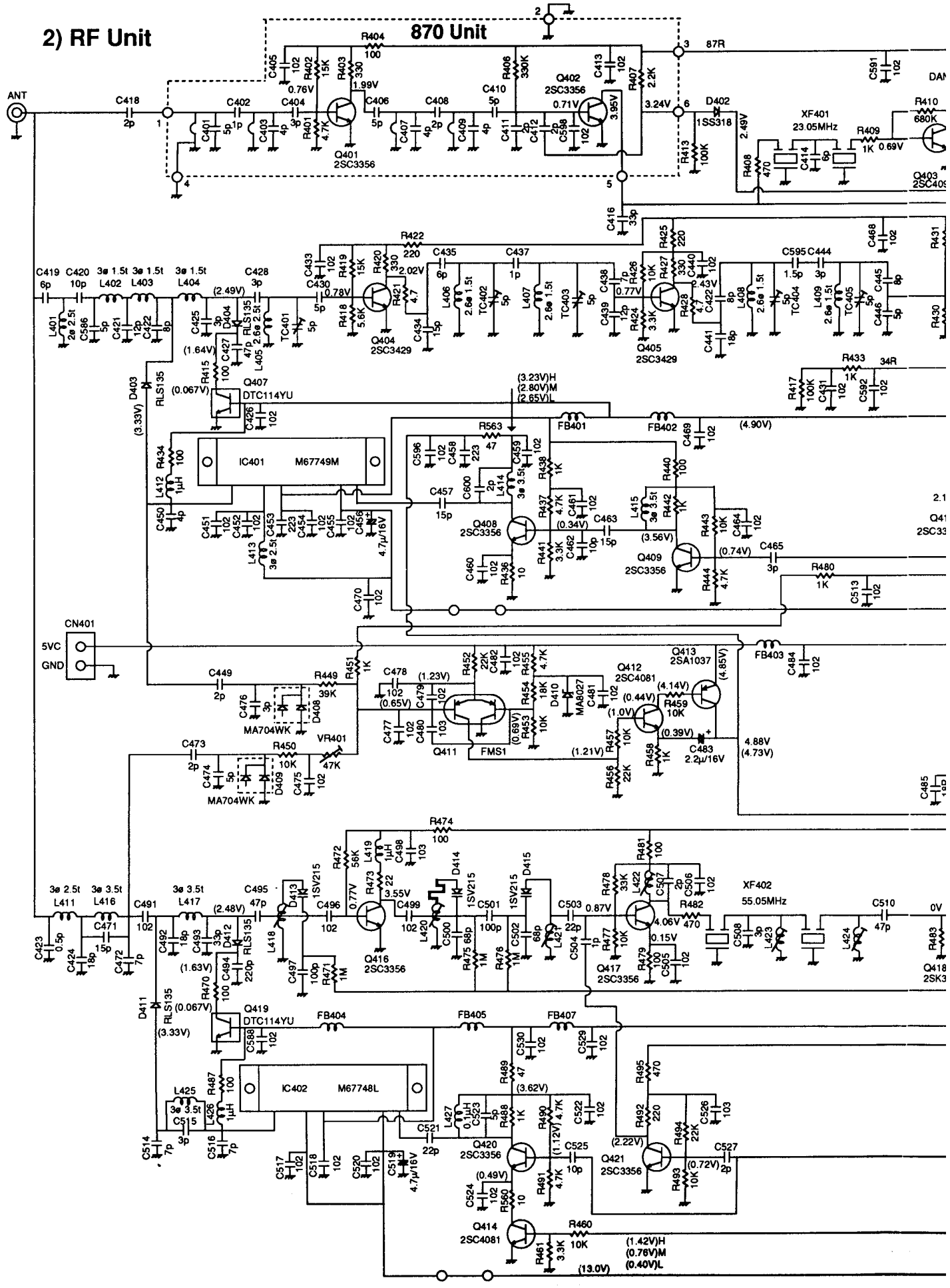
870 Unit
ANT
IC401 M67749M
IC402 M67748L
Q401 2SC3356
Q402 2SC3356
Q403 2SC409
Q404 2SC3429
Q405 2SC3429
Q407 DTC114YU
Q408 2SC3356
Q409 2SC3356
Q411 FMS1
Q412 2SC4081
Q413 2SA1037
Q414 2SC4081
Q416 2SC3356
Q417 2SC3356
Q419 DTC114YU
Q420 2SC3356
Q421 2SC3356
D402 1SS318
D403 RLS135
D408 MA704WK
D409 MA704WK
D411 RLS135
CN401
5VC
GND
XF401 23.05MHz
XF402 55.05MHz
VR401
87R
34R

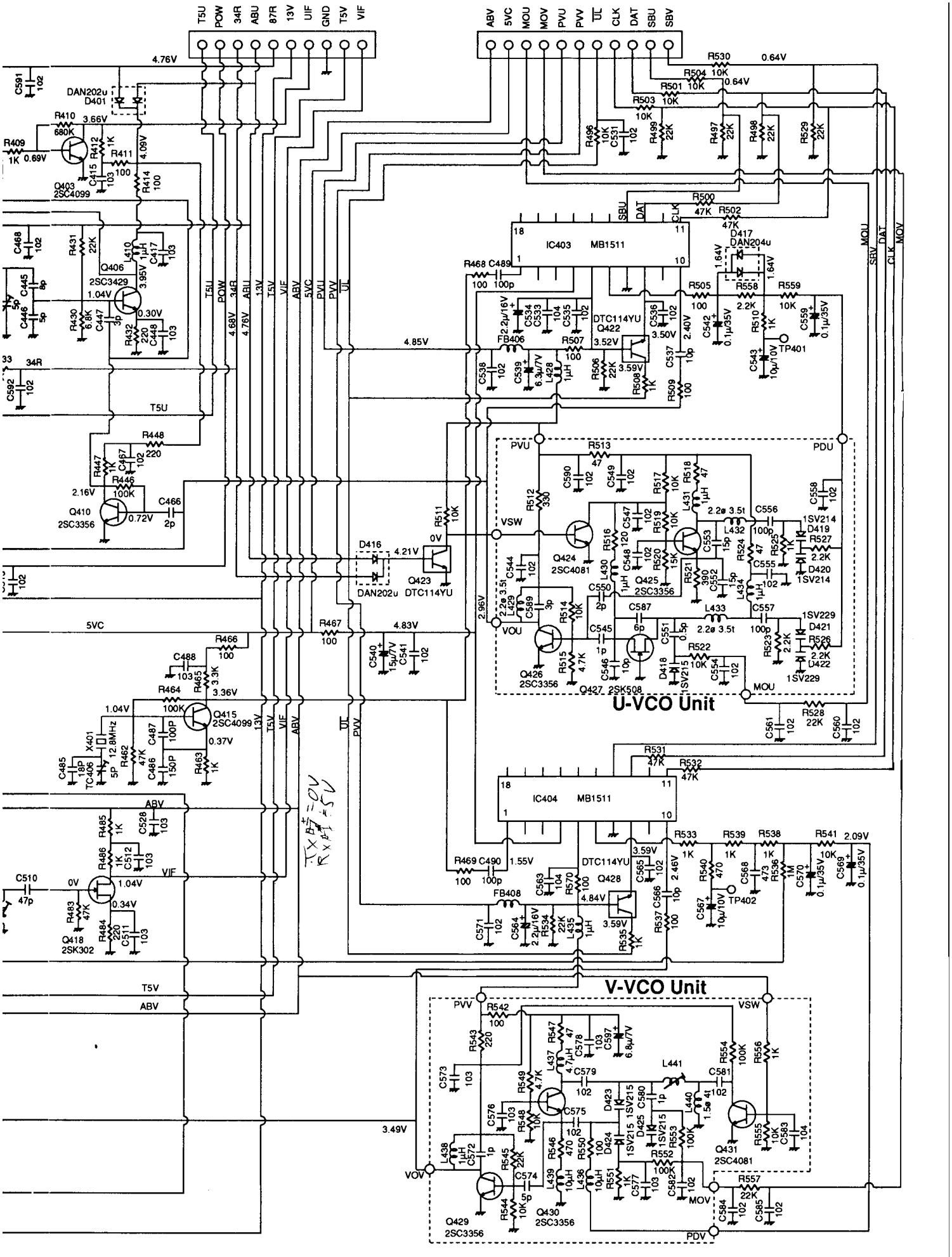
T5U
POW
34R
ABU
87R
13V
UIF
GND
T5V
VIF
ABV
5VC
MOU
MOV
PVU
PVV
UL
CLK
DAT
SBU
SBV
IC403 MB1511
IC404 MB1511
U-VCO Unit
V-VCO Unit
DAN202u
DTC114YU
Q403 2SC4099
Q406 2SC3429
Q410 2SC3356
Q415 2SC4099
Q418 2SK302
Q423 DTC114YU
Q424 2SC4081
Q425 2SC3356
Q426 2SC3356
Q427 2SK508
Q428 DTC114YU
Q429 2SC3356
Q430 2SC3356
Q431 2SC4081
TP401
TP402
TX 時 = 0V
RX 時 = 5V

3) IF Unit

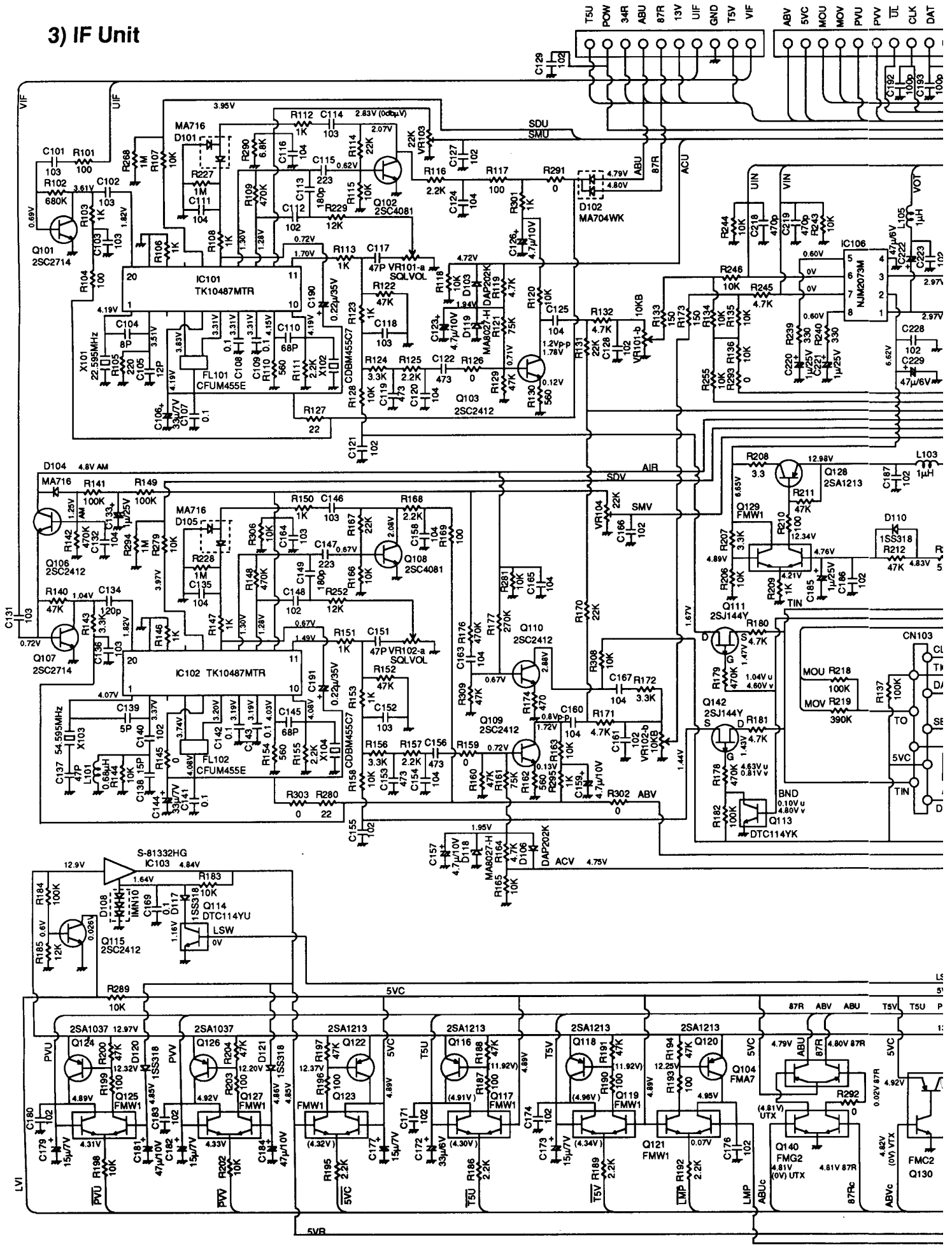

T5U
POW
34R
ABU
87R
13V
UIF
GND
T5V
VIF
ABV
5VC
MOU
MOV
PVU
PVV
UL
CLK
DAT
IC101
TK10487MTR
IC102 TK10487MTR
IC106
NJM2073M
IC103
S-81332HG
Q101
2SC2714
Q102
2SC4081
Q103
2SC2412
Q106
2SC2412
Q107
2SC2714
Q108
2SC4081
Q109
2SC2412
Q110
2SC2412
Q111
2SJ144Y
Q113
DTC114YK
Q114
DTC114YU
Q115
2SC2412
Q128
2SA1213
Q129
FMW1
Q140
FMG2
Q121
FMW1
Q104
FMA7
Q125
FMW1
Q127
FMW1
Q123
FMW1
Q117
FMW1
Q119
FMW1
Q124
Q126
Q122
Q116
Q118
Q120
FMC2
Q130
D102
MA704WK
D104
MA716
D101
D105
D110
1SS318
CN103
SDU
SMU
ACU
AIR
SDV
SMV
ACV
UIN
VIN
VOT
TIN
BND
LSW
5VC
5VB
LVI

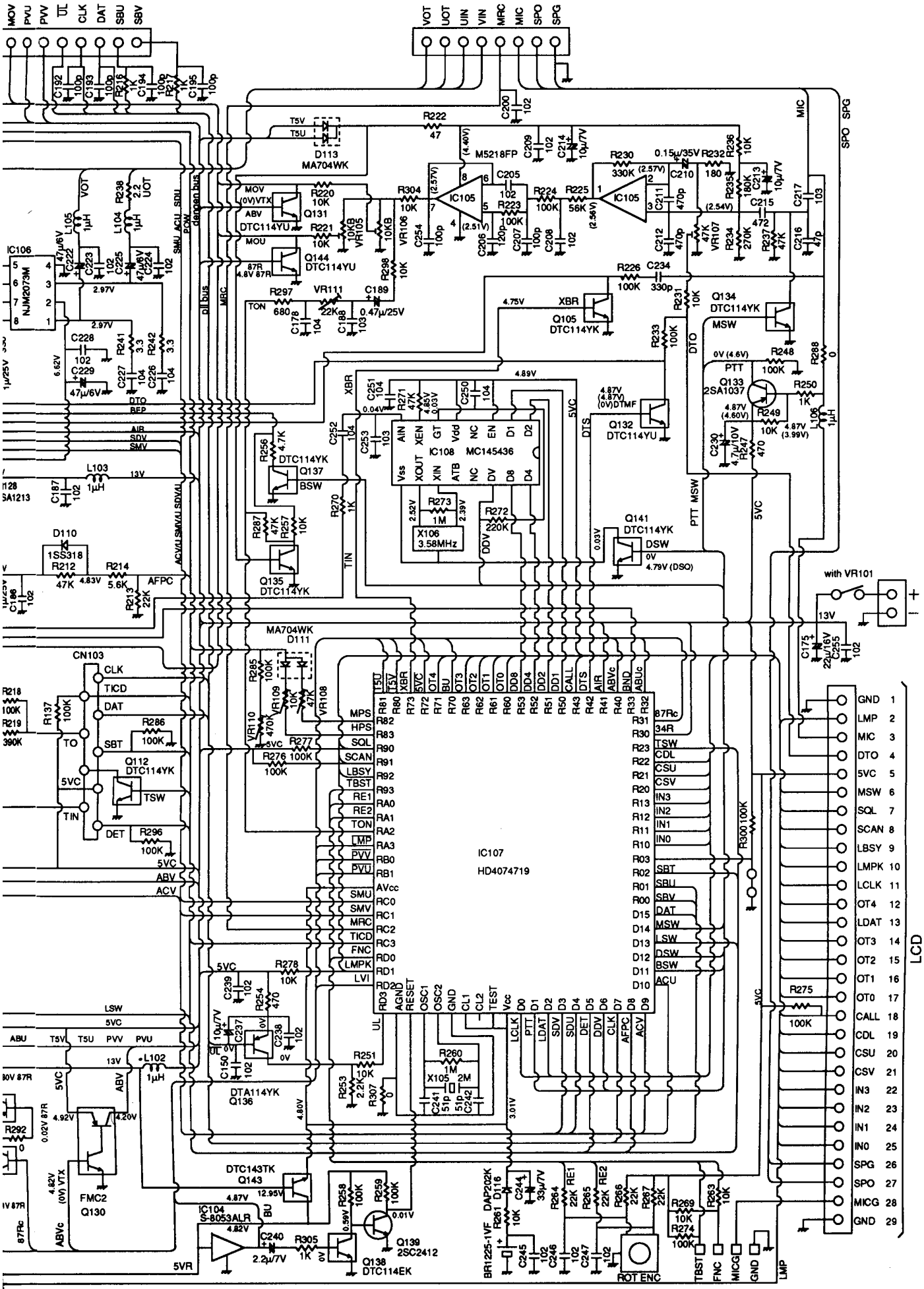
MOV
PVU
PVV
UL
CLK
DAT
SBU
SBV
VOT
UOT
UIN
VIN
MRC
MIC
SPO
SPG
IC106
NJM2073M
IC105
M5218FP
IC108
MC145436
IC107
HD4074719
IC104
S-8053ALR
CN103
D113
MA704WK
D111
D110
1SS318
Q131
DTC114YU
Q144
DTC114YU
Q105
DTC114YK
Q134
DTC114YK
Q133
2SA1037
Q132
DTC114YU
Q137
DTC114YK
Q135
DTC114YK
Q141
DTC114YK
Q112
DTC114YK
Q136
DTA114YK
Q143
DTC143TK
Q130
FMC2
Q139
2SC2412
Q138
DTC114EK
X106
3.58MHz
X105
2M
with VR101
LCD
GND 1
LMP 2
MIC 3
DTO 4
5VC 5
MSW 6
SQL 7
SCAN 8
LBSY 9
LMPK 10
LCLK 11
OT4 12
LDAT 13
OT3 14
OT2 15
OT1 16
OT0 17
CALL 18
CDL 19
CSU 20
CSV 21
IN3 22
IN2 23
IN1 24
IN0 25
SPG 26
SPO 27
MICG 28
GND 29
ROT ENC

4) SW Unit

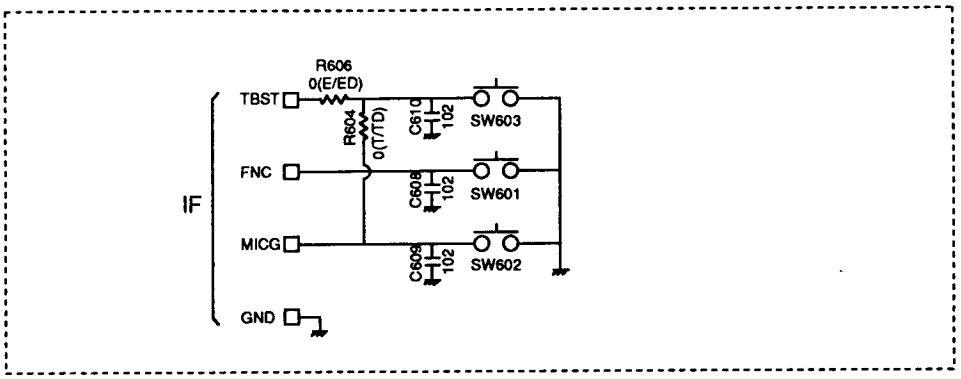

5) Jack Unit

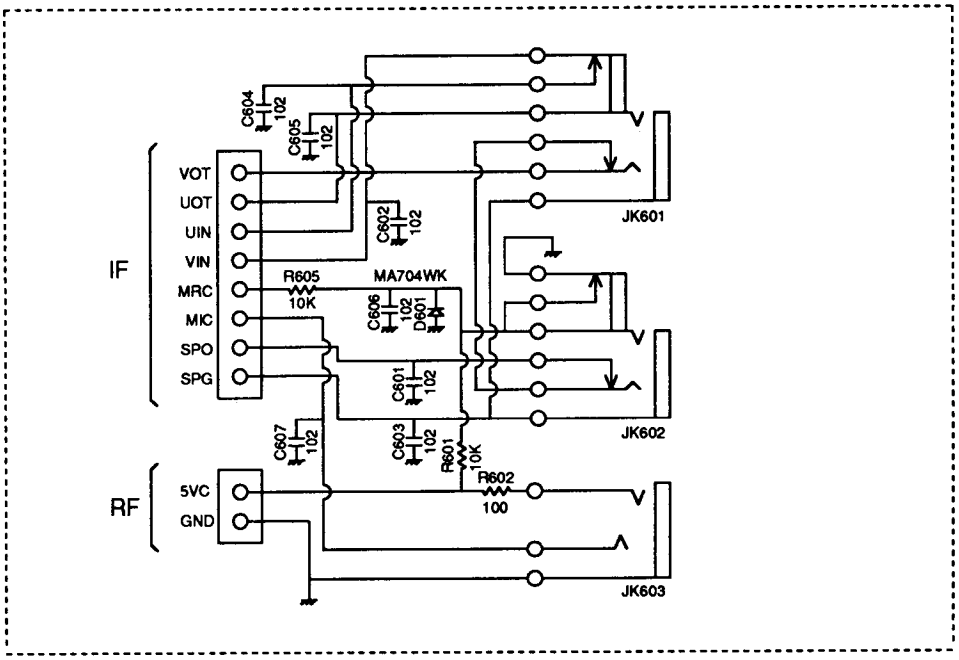

6) CTCSS Unit
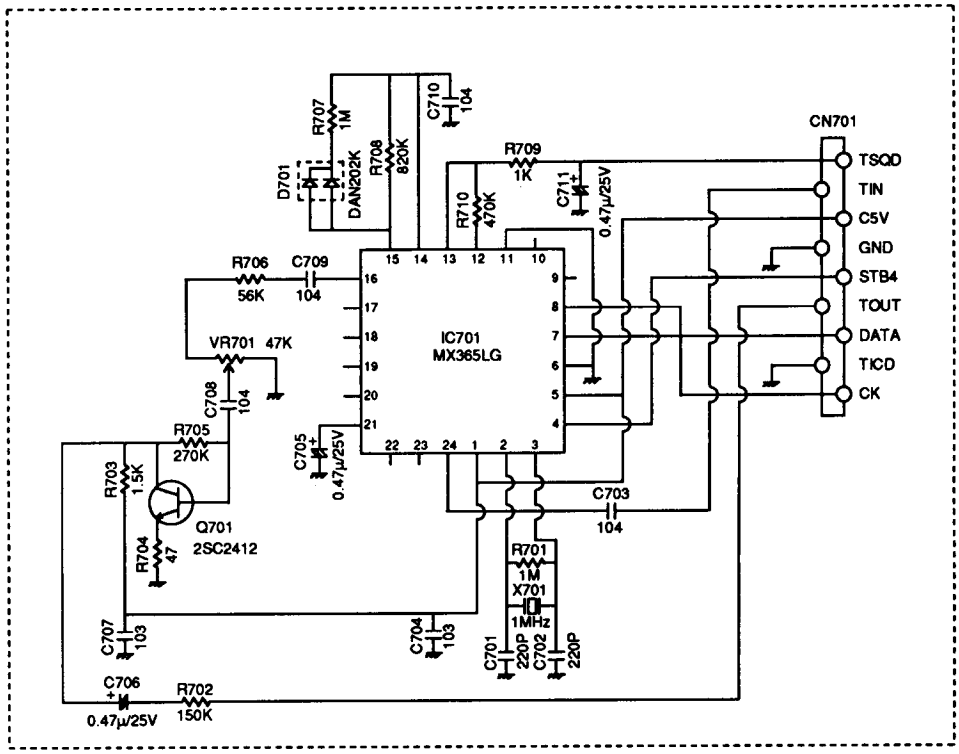
DJ580T/TD ,TA only