Circuit source guide

Here is an abundance of circuits that should prove a useful, if not informative, source from which you can derive other circuits or assemble a circuit from a variety of 'blocks' to suit a particular application or solve a circuit problem. Tim Orr has assembled this anthology, covering applications that range from dc control to digital instrumentation, preamps to power supplies and more. You may have seen some of these ideas before, but there are bound to be plenty you haven't.

You'll find device pinouts on the last page and a guide to purchasing components in Shoparound in this issue. Notes have been appended to some circuits by David Tilbrook.

GENERATORS

Op-amp Oscillator

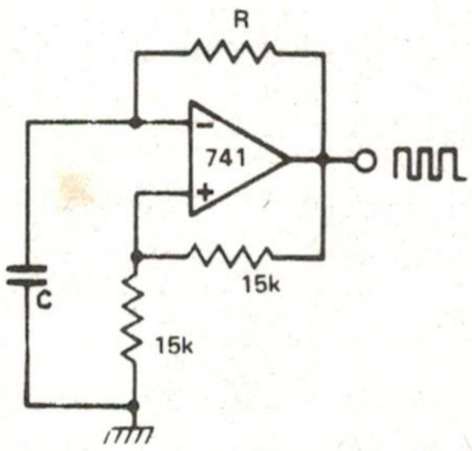

$F \sim \frac{1}{RC}$ (rule of thumb)

TTL Oscillator

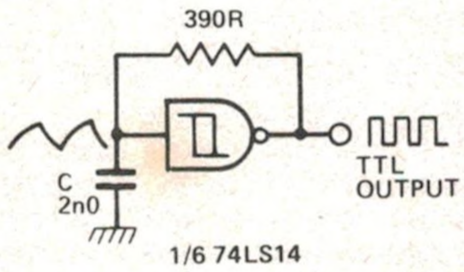

Vary C to change frequency
***Do not* increase the size of the 390R resistor**

Frequency range = 1 Hz to 1 MHz

LED Flasher

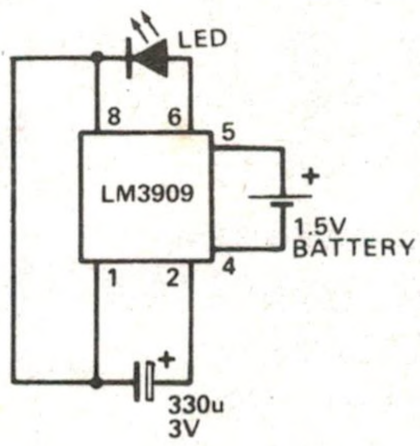

1 Hz flash rate
Average current drain = 0.32 mA
Circuit uses the timing capacitor to boost the output voltage

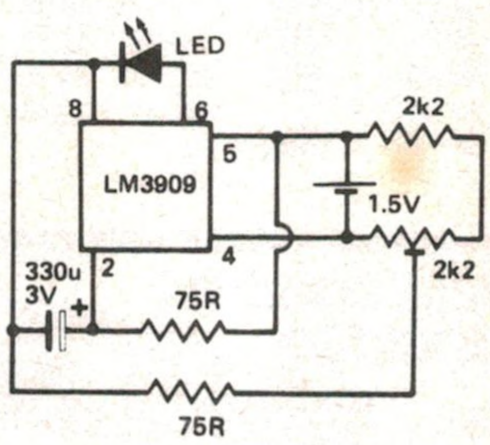

Variable flash rate 0 to 20 Hz

Precision VCO

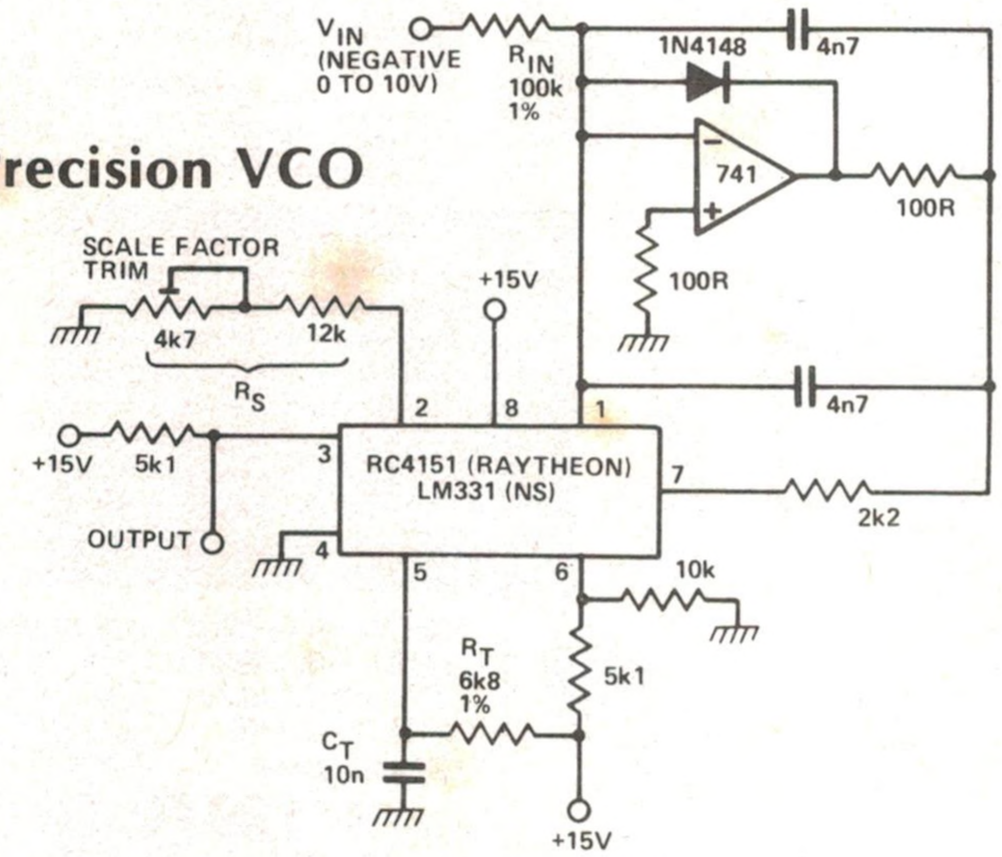

$F = (-V_{IN})/2.09 \times (R_S/R_{IN}) \times 1/(R_T C_T)$ Hz

Maximum frequency = 10 kHz
Linearity = 0.05%
Response time = 10 us
Op-amp powered from ± 15 V

The LM331 is a precision voltage-to-frequency converter. In this application an additional op-amp is used to facilitate immediate response to changes of the input control voltage. The other advantage of the use of an additional op-amp is an increase in the sensitivity of the circuit to low control voltages. The limit here is the offset voltage and current for the particular op-amp used. The 741 specified is satisfactory although an improvement would be obtained if alternative devices were used, e.g: LM108, LM308A or LF351B.

Note that the 4n7 capacitor in the integrator should be a mylar capacitor to ensure accurate operation.

Function Generator

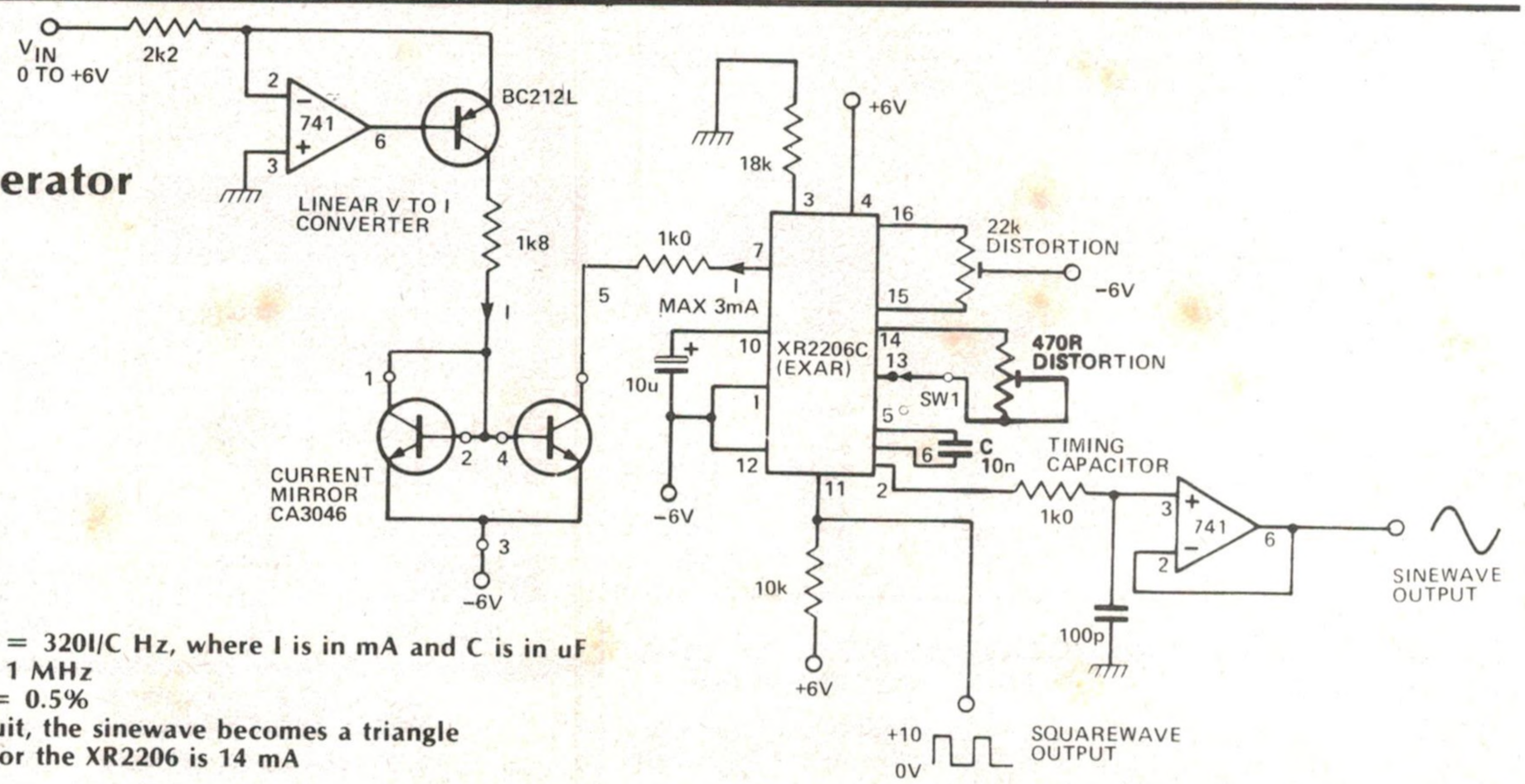

Oscillation frequency F = 320I/C Hz, where I is in mA and C is in uF
Maximum frequency = 1 MHz
Best THD of sinewave = 0.5%
When SW1 is open-circuit, the sinewave becomes a triangle
Typical supply current for the XR2206 is 14 mA

Dual Integrator Oscillator

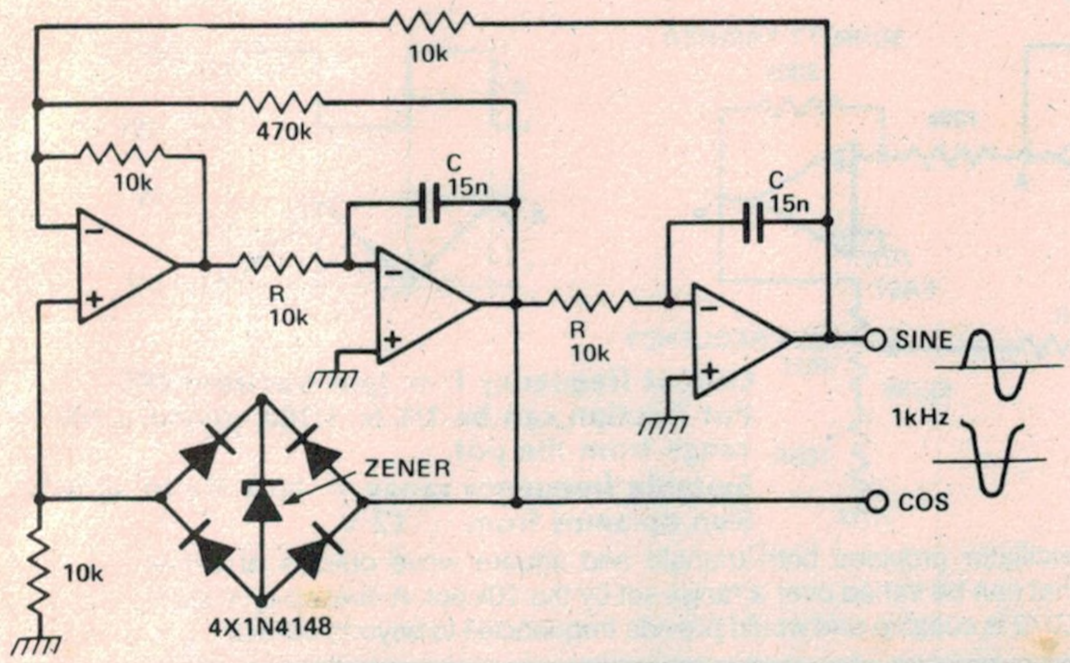

Quadrature outputs (ie sine and cosine)

Output frequency $F = \frac{1}{2\pi RC}$ **Hz**

To change frequency, change both R's or both C's.
Maximum frequency ~ 20 kHz
Minimum frequency ~ 0.016 Hz using C = 1u0, R = 10M, and TL081 op-amps
Oscillation amplitude = 2x(zener voltage + 1V2) V_{pp}

This oscillator provides two sinewave outputs with a phase shift of 90° with respect to each other, i.e: sine and cosine waveforms. The output frequency is relatively stable provided good components are used, and distortion figures below 0.1% are easily obtained.

Linear VCO

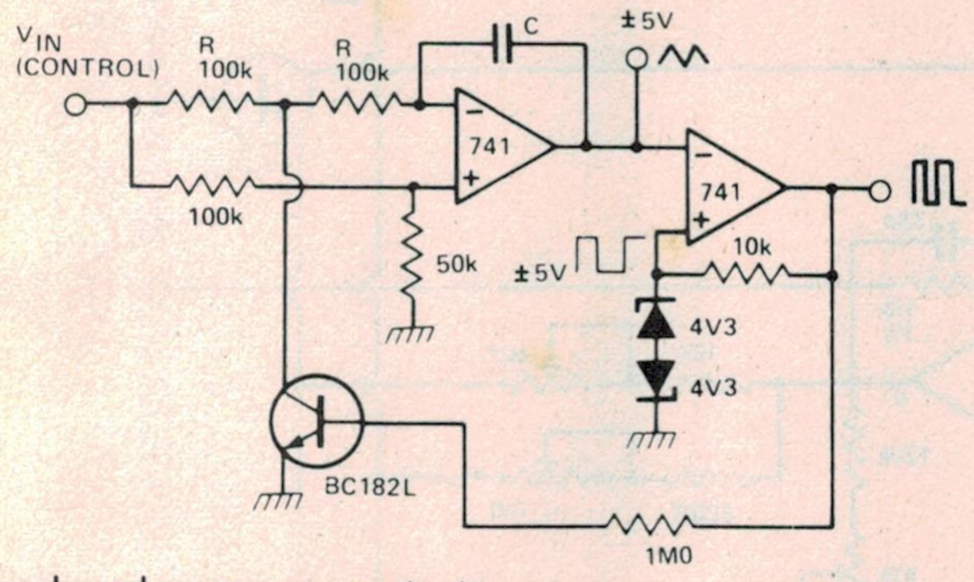

Triangle and square wave outputs

Output frequency $F = (1.667 \times 10^{-7} \times V_{IN})/C$ **Hz**

If C = 1n0 and V_{IN} = 10V, then F = 1.66 kHz

Changing both R's from 100k to 10k will increase F by x 10

For low frequencies use TL081 op-amps
Frequency range 0.1 Hz to 10 kHz

Staircase Generator

Output frequency $F = F_{CLK}/64$ **Staircase is made up of 64 steps**

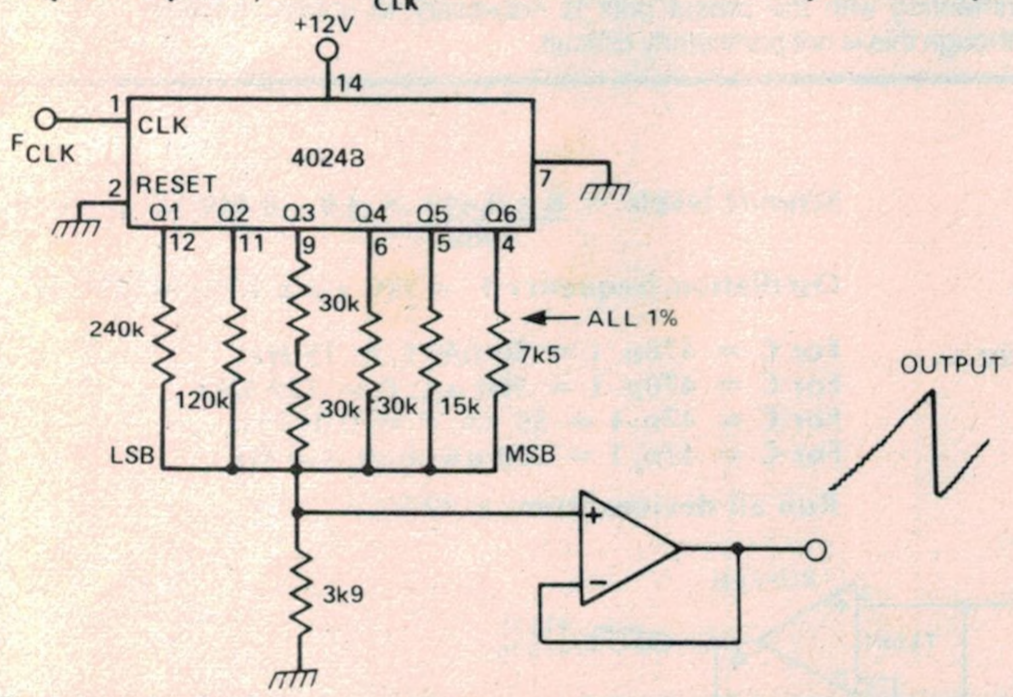

The 4024B is a CMOS seven-stage binary ripple counter. Upon receipt of a clock pulse the counter selects a combination of the resistors and increases the voltage at the output of the op-amp buffer. As with all edge-triggered devices the clock should be conditioned to have a single clean edge with a rise and fall time faster than 5 uS. The device clocks on the falling edge of the clock waveform.

Variable Length Tone Burst Generator

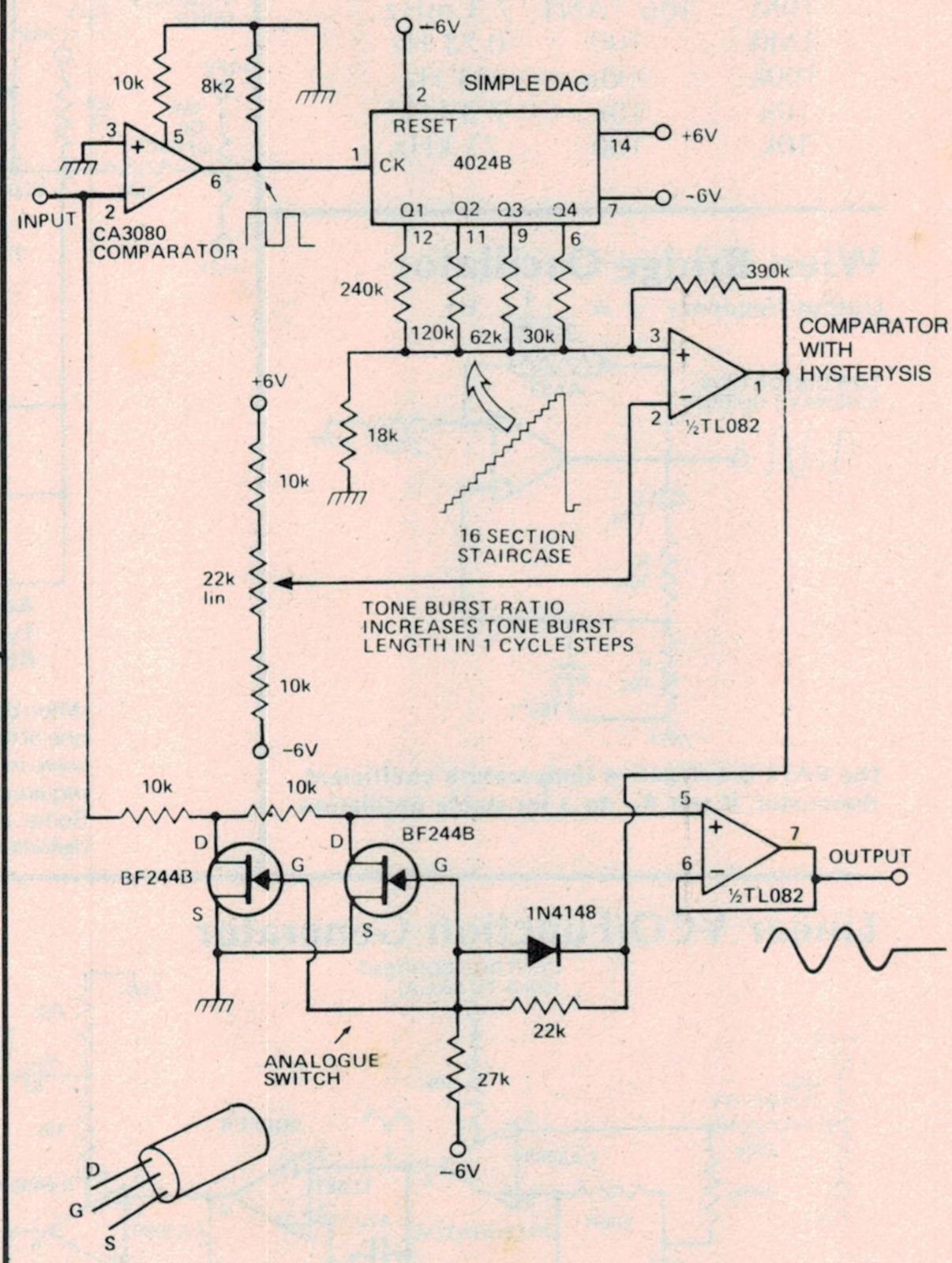

Input is a sinewave or any other periodic waveform, maximum level ± 2 V, maximum frequency 100 kHz
Output is a tone burst variable from one cycle on, 15 cycles off to 15 cycles on, one cycle off
All devices powered from ± 6 V

GENERATORS

CMOS 555 Oscillator

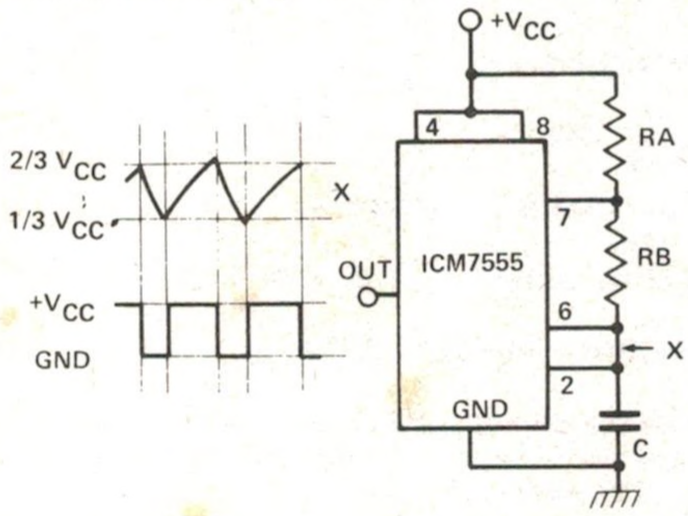

Output frequency F = 1.46/C(RA + RB)
C in farads, R in ohms
Quiescent current ∿ 120 uA
Input current ∿ 50 pA (this allows the use of resistors up to 10M in value)
Frequency range 0.001 Hz to 500 kHz
Supply range 2 to 18 V
Rise and fall time (pin 3) = 40 ns

RA,RB	C	F
10M	10u TANT	7.3 mHz
1M0	1u0	0.73 Hz
100k	100n	73 Hz
10k	10n	7.3 kHz
10k	1n0	73 kHz

Wien Bridge Oscillator

Output frequency $F = \frac{1}{2\pi RC}$ **Hz**

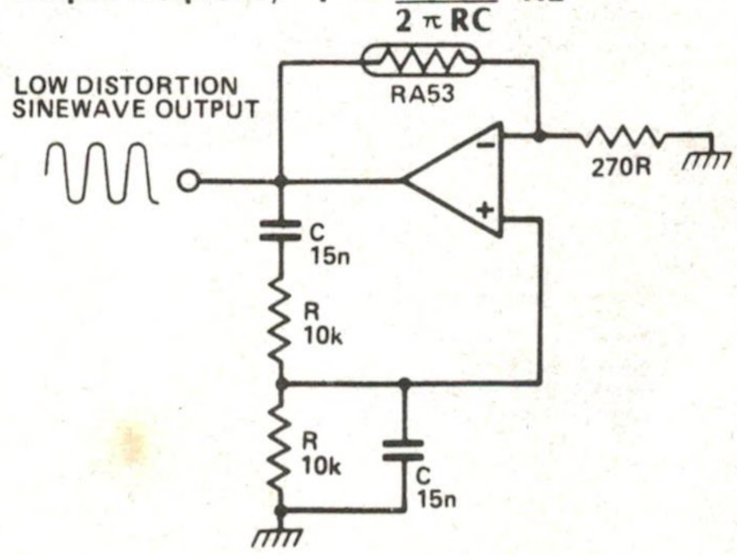

The RA53 is a negative temperature coefficient thermistor; it sets A_V to 3 for stable oscillation.

Triangle/Square Wave Oscillator

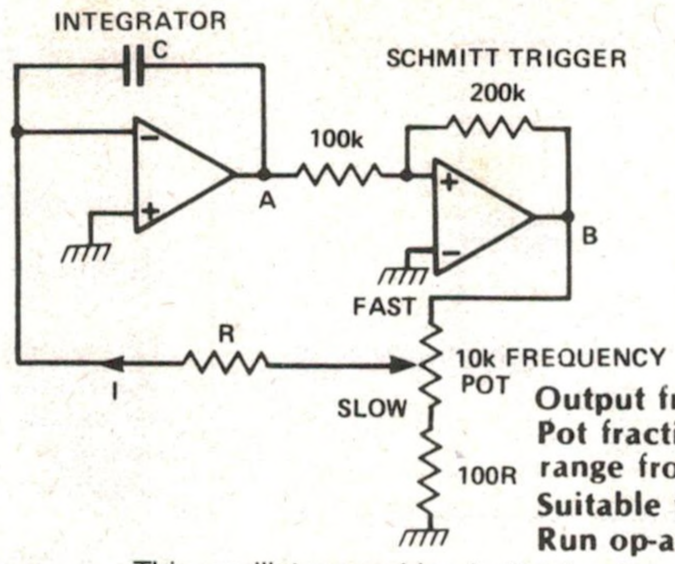

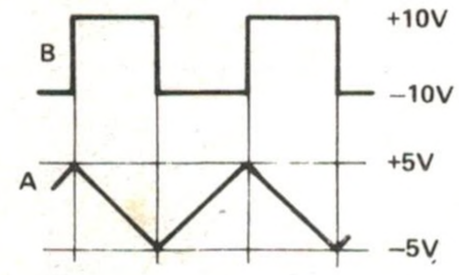

Output frequency F = (pot fraction)/2RC
Pot fraction can be 1/1 to 1/100, giving a 100 to 1 range from the pot
Suitable frequency range = 0.01 Hz to 50 kHz
Run op-amps from ± 12 V

This oscillator provides both triangle and square wave outputs at a frequency that can be varied over a range set by the 10k pot. A dual op-amp such as the TL072 is suitable and would provide frequencies to beyond 50 kHz.

Triangle To Sine Wave Converter

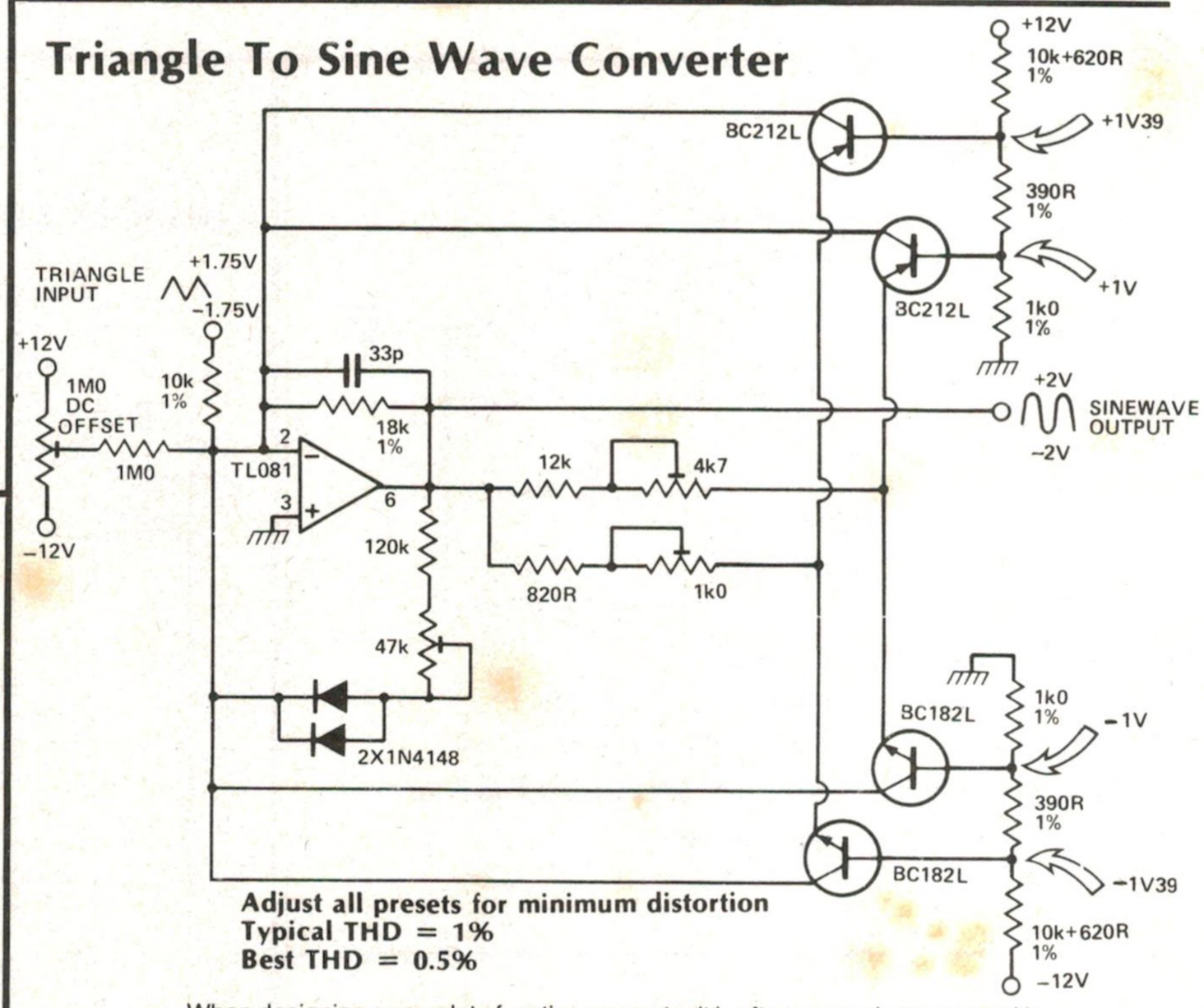

Adjust all presets for minimum distortion
Typical THD = 1%
Best THD = 0.5%

When designing a complete function generator it is often convenient to start with one of the triangle/square wave oscillators given earlier and convert the triangle wave into a sinewave. This is a particularly good method if a sweep oscillator is required, since sinewave sweep oscillators are extremely difficult to design. Some experimenting with the preset pots is necessary to obtain minimum distortion, although this is not particularly difficult.

Linear VCO/Function Generator

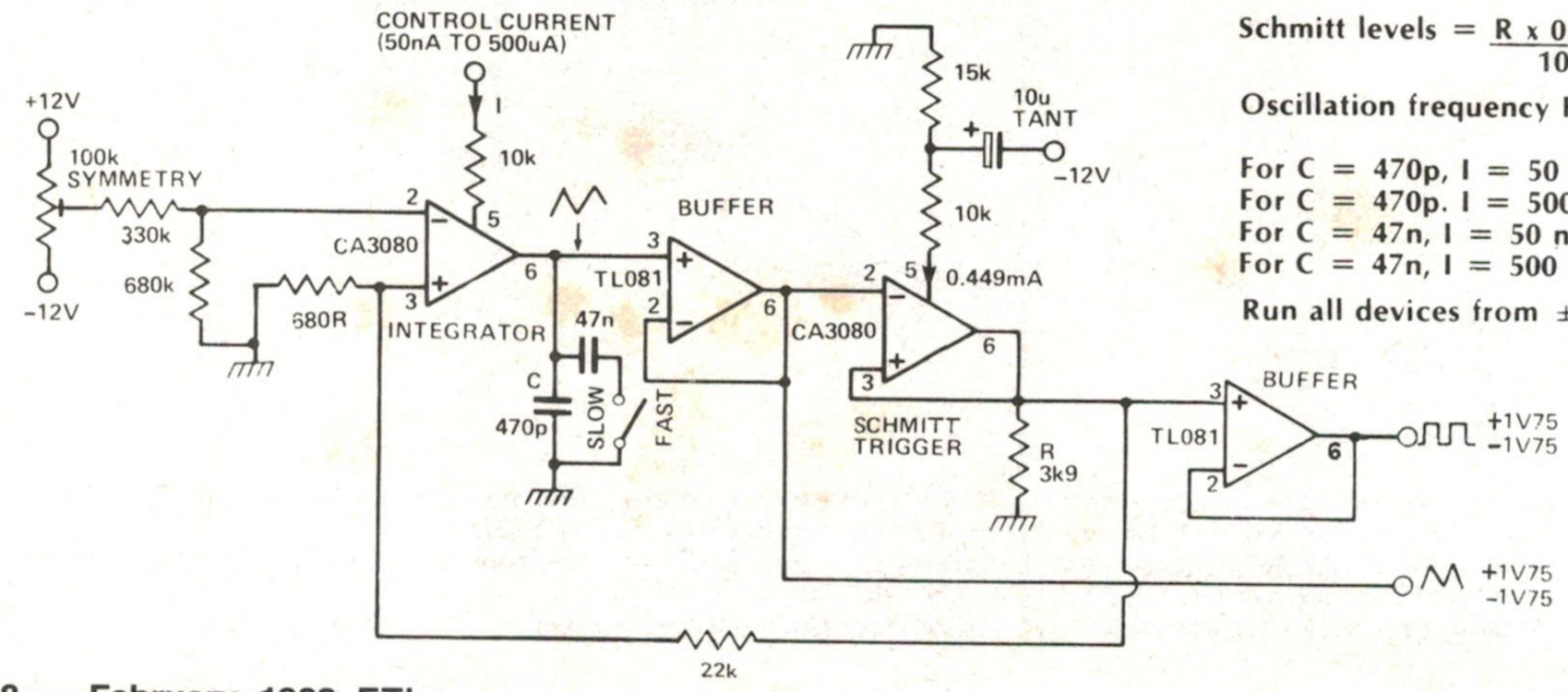

Schmitt levels $= \frac{R \times 0.449}{1000} = 3.9 \times 0.449 = \pm 1V75$

Oscillation frequency F = I/(C x 4 x 1.75) = I/7C Hz

For C = 470p, I = 50 nA, F = 15 Hz
For C = 470p. I = 500 uA, F = 150 kHz
For C = 47n, I = 50 nA, F = 0.015 Hz
For C = 47n, I = 500 uA, F = 150 Hz

Run all devices from ± 12 V