Constructional Project

FIDO PEDOMETER

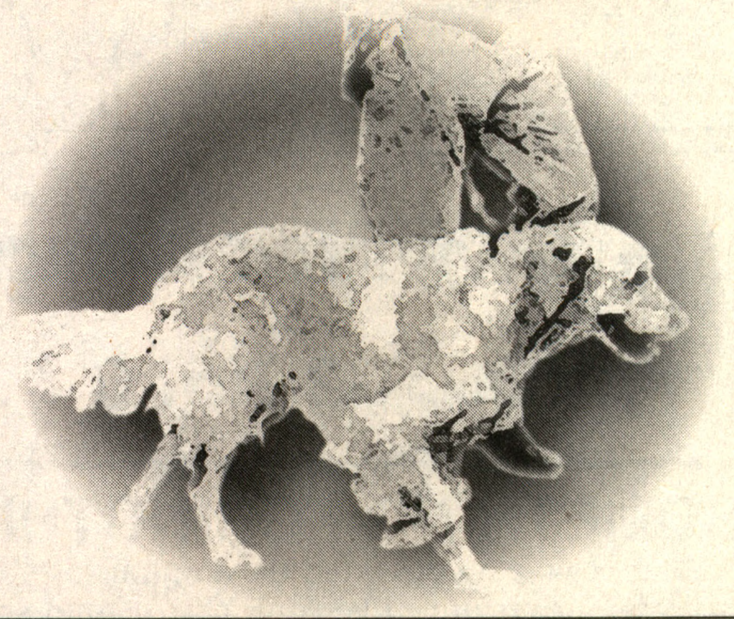

MIKE BOYDEN

Keeping track of how far you've walked!

TREKKING guidebooks often refer to distances between minor landmarks for navigation purposes. This is not a handicap when navigating across countryside that is full of easily distinguished geographical or man-made features. However, when the author was trekking in the more remote locations of the French Pyrenees, estimating the distance walked was difficult and retracing steps became frustrating.

Fido was developed in an effort to look for navigational signs in roughly the expected location. It can record the distance traversed by a walker or runner and was extended to calculate average speed – a useful addition when planning how long it will take to get back to comfort!

A PIC16F84A microcontroller is employed and the unit can be set to work in miles or kilometres.

WALKING THE WALK

Some background research revealed that estimation of the distance travelled by walkers (or runners) has presented engineers with some difficulty.

Arctic explorers measured movement by towing a "log" in the form of a rotating wheel that made connection with the ground from the rear of a sledge. The turns of the wheel were counted by a gear mechanism, which calculated and displayed the distance covered on a clock face. However, walkers and runners need to move freely, unencumbered with wheels and other contraptions.

Inertial guidance systems have for many years offered a "contactless" means of determining position. The theory is that the distance moved by a body can be determined if the acceleration of the body is accurately known in time. Gyroscopes (looking very much like the toys with which we are familiar) are widely used to detect acceleration. Aeroplanes and ships use these systems extensively.

The problem with using inertial systems is that measuring very small horizontal accelerations when a person is walking (1mg or $1{\cdot}10^{-3}$g) over a long period of time (say 12 hours) leads to an unacceptable level of error (i.e. 25%). Also, the earth's acceleration (g) needs to be removed from the calculations, further increasing the complexity and potential for error. The term *g* refers to the acceleration exerted on an object at the surface of the earth, which is approximately $9{\cdot}81\text{ms}^{-2}$.

More recently, a mathematical link between the vertical acceleration of the human hip joint and stride length has been established. By combining microcontrollers and accelerometers using MEMS (Micro Electrical Mechanical Systems) technology – see *Teach-in 2002*, Aug '02 – commercial pedometers started to emerge.

The developments combined to reduce errors to about 8%, which is the sort of accuracy that commercial units now offer. However, the author considered the cost of using an accelerometer as rather excessive, as was purchasing a Global Positioning System (GPS) system.

It was then discovered that Army personnel are trained to take a compass bearing and count the number of steps in a particular direction. Walking the same number of steps on a reciprocal bearing should return them to the same spot. The problem here is that the length of a stride can change, depending upon whether the subject is running, moving up or down a gradient, or simply tired. Some texts suggested that stride length could vary by as much as 40%, which would give unacceptable accumulative errors.

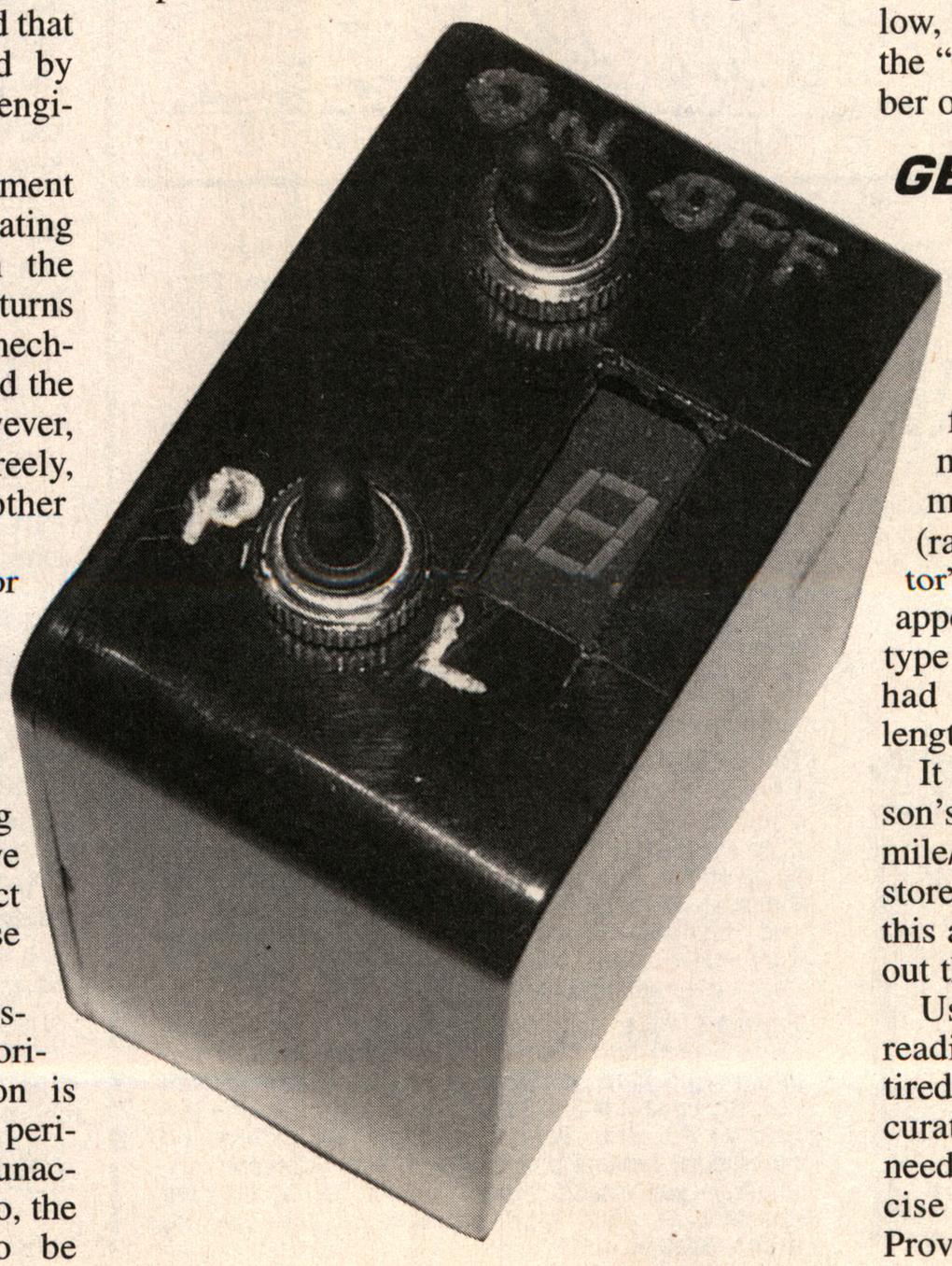

Table 1. Results of Stride Counting

Type of exercise	*Gradient %*	*Strides (1 mile)*
Walk (leisurely 3·5mph)	0	2280
Run (light 5·0mph)	0	1960
Walk (leisurely 3·5mph)	10	2310
Run (light 5·0mph)	10	1982

Nevertheless, in an effort to keep costs low, the literature was reviewed regarding the "stride counting" approach and a number of stride counting tests were made.

GET WALKING

The treadmill machine at the author's local gym was used to count the number of strides to run (and walk) one mile. The results are listed in Table 1. The count was also noted for a variety of gradients (the treadmill incorporated a gradient adjustment) and various stages of tiredness (ranging from mildly hot, to "get a doctor"). Minor gradient changes did not appear to introduce major errors, but the type of motion (i.e. walking or running) had a significant influence on stride length.

It was concluded that providing a person's unique "stride constant" (strides per mile/kilometre) could be estimated and stored, then a microcontroller could use this as a basis of a distance monitor, without the need for complex accelerometers.

Users would have to accept that the readings for steep terrain or excessive tiredness would become increasingly inaccurate, and that each pedometer would need to be calibrated to the type of exercise and individual's stride length. Providing these limitations were accepted,

a unit offering about 10% accuracy was considered achievable and acceptable, given the simplicity of design.

DEVELOPMENT

The next problem was to reliably detect and count strides. After a little experimentation it was found that two opposing tilt switches, S1 and S2, pointing downwards by about 10 degrees, could be made to track the cycle of a leg movement.

Referring to the full circuit diagram in Fig.1, the tilt switches are connected respectively to the RA0 and RA1 pins of a PIC16F84A on one side and to the 0V line on the other. The pins are biassed normally-high via resistors R1 and R2, and l.e.d.s D1 and D2.

As illustrated in Fig.2, when the knee is raised the conductive fluid in switch S1 is forced momentarily onto its contacts, closing them, so applying logic 0 to pin RA0. Pin RA1 remains at logic 1. As the foot is placed down, both S1 and S2 open, and both RA0 and RA1 are set at logic 1. As the knee is raised in the last part of the stride then S1 opens and RA0 goes to logic 1, but S2 closes, with RA1 at logic 0.

The prototype was taken to the local gym for testing, where it was found by experimentation that the detection unit operated best when strapped to the left upper calf. Note that the software only allows the unit to function in this position.

The software verifies the correct switch closure sequence and also includes some time delays. These are necessary to reduce the sensitivity of the system and curtail the number of "bad reads" due to the equivalent of contact bounce.

For simplicity and cost effectiveness, a single 7-segment l.e.d. display was used for all of the display and control interfacing, using a cyclic technique to display the various factors. A sounder, WD1, is included to signal each valid step when in the Learn mode – this improved the setting-up procedure. The mode of operation is selected by means of a 3-way toggle switch, S3.

DISTANCE AND TIME

The main computation undertaken by Fido requires distance and elapsed time to be known.

Time: Fido's clock rate is set by a 20ms interrupt generated by a TMR0 overflow. Although this would not be accurate enough for daily time keeping, it is accurate enough for this application. The 20ms "ticks" are counted and eventually used to increment a "6-minute", 16-bit timer-counter (Ttimehi, Ttimelo).

Distance: If Fido is to work in miles then the number of strides recorded to complete one mile is entered into Fido during the Learn mode. Once the calibration distance has been walked, a switch adjustment ensures that the number of strides (the stride constant) is stored in the PIC's non-volatile Data EEPROM. (The software is written to store the stride value for every stride that is taken after the first 255 strides.) The value placed into the EEPROM is calculated from:

Stride Constant = Strides Counted / ten

The Stride Constant is subtracted from the 16-bit stride counter (distlo, disthi) to see if 0·1 of a mile has been walked. If it has, then this is then used to increment a "0·1 mile", 16-bit Total Distance counter (Tdisthi, Tdistlo).

Distance is recorded and displayed by means of a number of incrementing decimal counters.

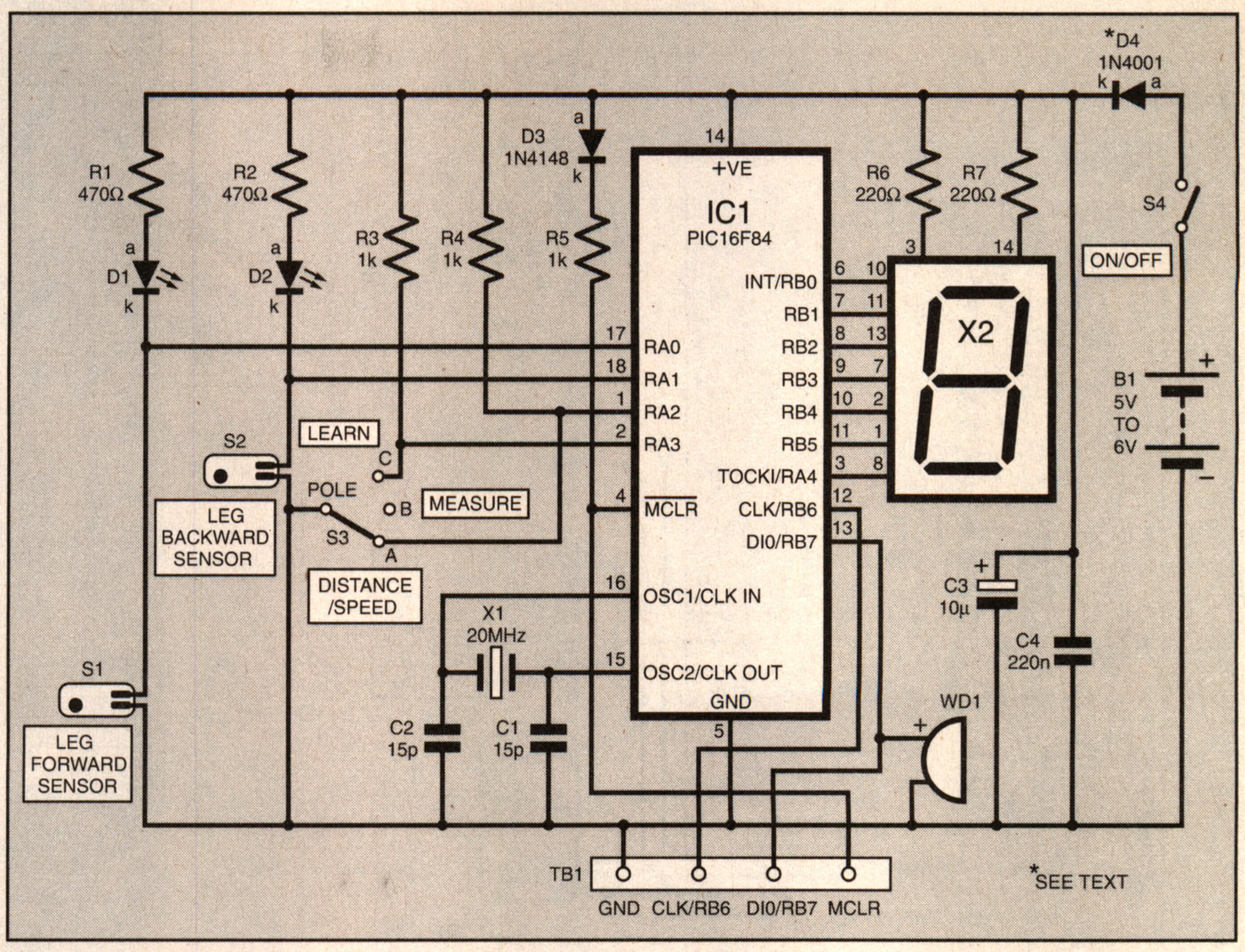

Fig.1. Complete circuit diagram for the Fido Pedometer.

CALCULATIONS

Average speed is calculated at each 6-minute interval and a "snapshot" of the Distance Counter is stored in Tdisthi1 and Tdistlo1. The average speed is then derived from:

Average speed (miles/hour)
= 0·1 mile counter/ 6-minute counter
i.e.
(Tdisthi1, Tdistlo1) / (Ttimehi, Ttimelo)

Hence the average speed displayed is the average since the time that Fido was switched on. If the walker stops for lunch, and Fido is left on, the average speed will be seen to steadily fall. If the average speed is required "per leg" of a journey, then simply record the distance together with average speed and turn off Fido, thereby resetting the unit in readiness for the next phase of your walk.

A "standard" library of 16-bit unsigned integer mathematical functions from Microchip's website (**www.microchip.com**) were used in this application. "Invalid" divisions (i.e. 1 / 0 or 2 / 3) are returned as 0, rather than the true mathematical results of infinity or a fraction. Mathematically, Fido has a maximum capability of approximately 6,500 miles and 270 days! A reset of the unit is forced if the distance exceeds 99·9 units, but the time has no restrictions.

INHIBITING ERRORS

Although Fido computes and displays distance immediately, the first computed value of speed is only available for display six minutes after turning Fido on. Distance and average speed values displayed in the first 0·5 miles should be treated with caution as the small reading errors represent a significant proportion of the initial measured values. The errors rapidly diminish as the time and distance measurements increase.

The measurement technique assumes that most of the movement is a genuine walking or running motion, hence the errors contributed by a few "stumbles" are greatly reduced when averaged against the number of strides that equate to a mile for individual walkers.

RESOURCES

Software for this design is available on 3·5-inch disk (Disk 6) from the Editorial Office – a nominal handling charge applies (see the *EPE PCB Service* page. It is also available for *free* download from the *EPE* ftp site. The easiest way into this is via the home page **www.epemag.wimborne.co.uk**. Click the top link saying **ftp site (downloads)**, then take the path **pub/PICS/Fido**.

CONSTRUCTION

Fido is constructed on a single printed circuit board (p.c.b.) whose full-size track layout and component positions are shown

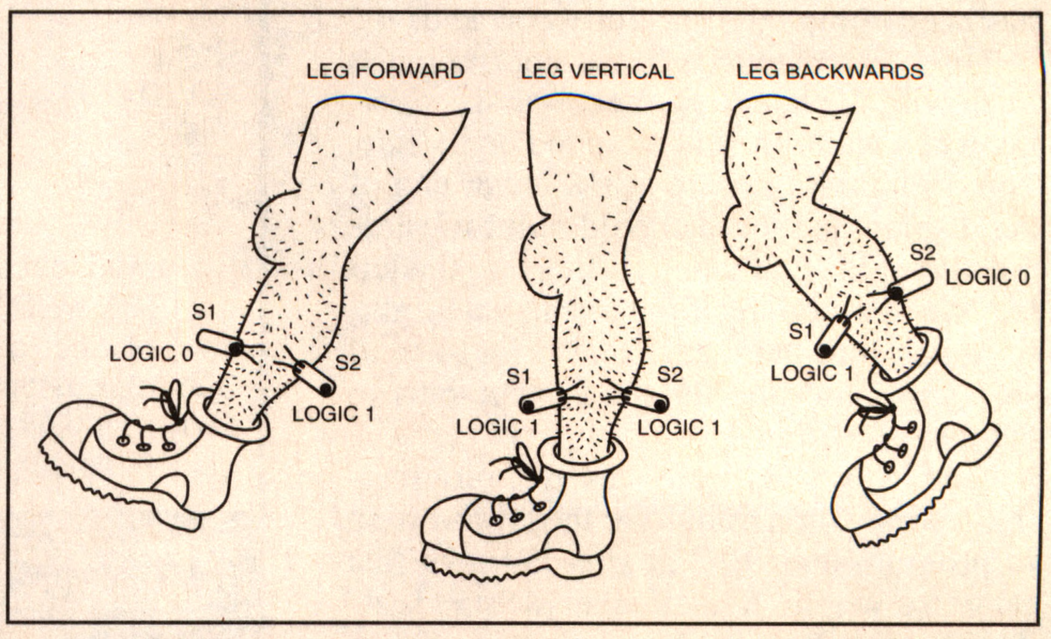

Fig.2. Fido's logic (with or without hairy legs!).

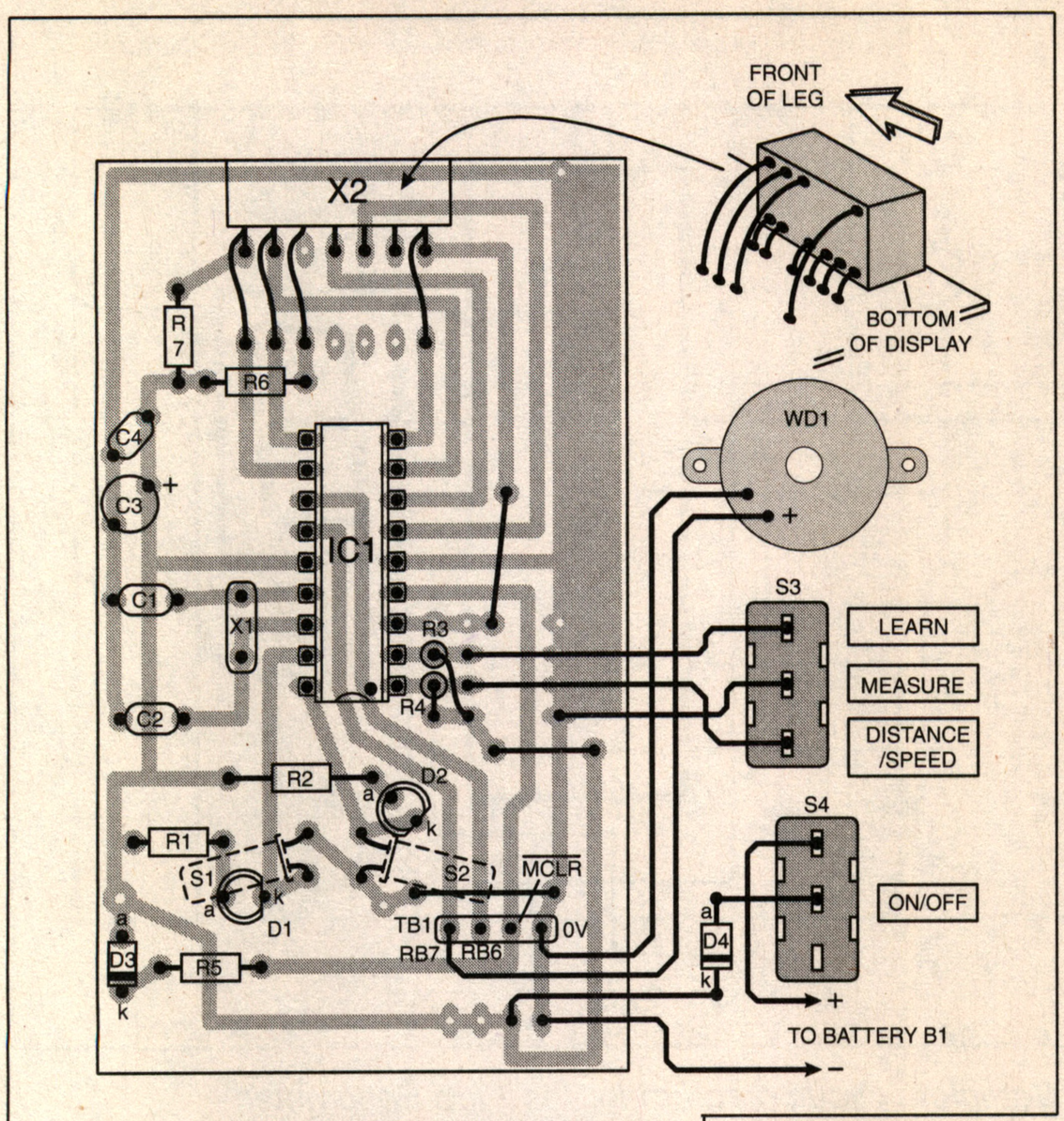

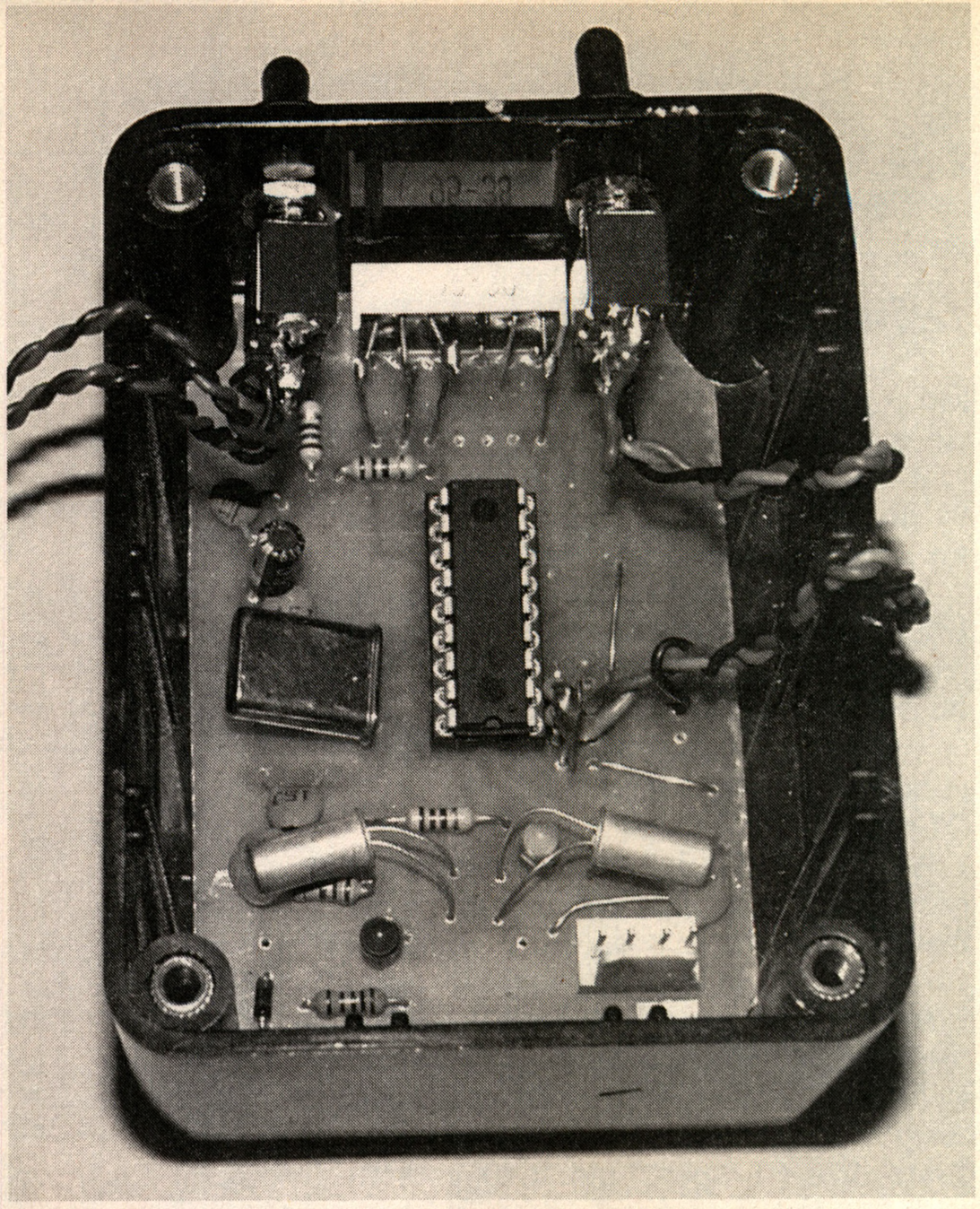

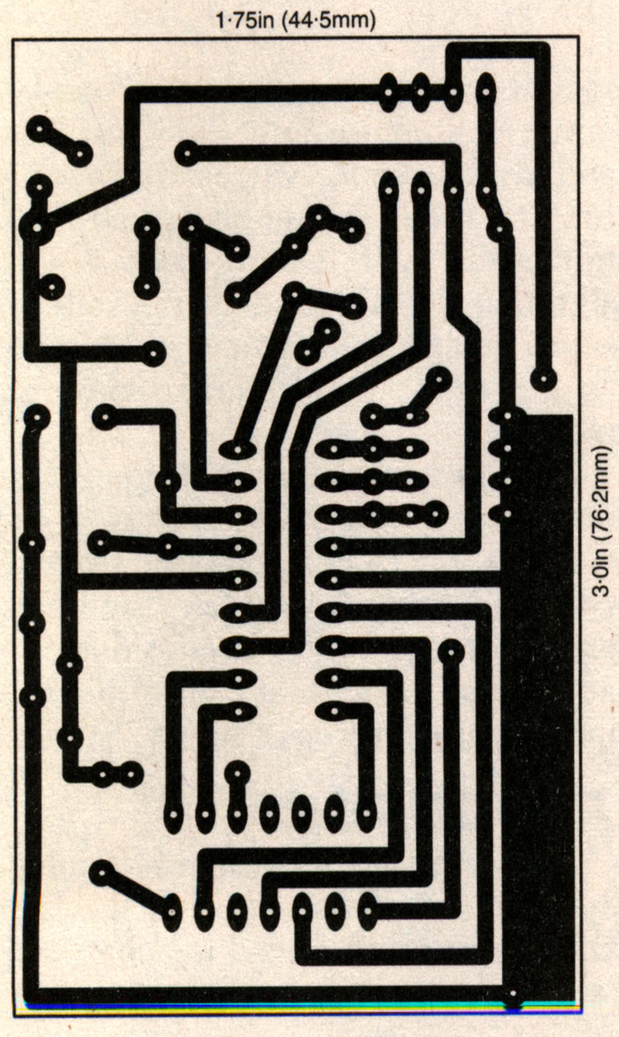

Fig.3. Printed circuit board component layout and full size copper foil master track pattern for the Fido pedometer.

in Fig.3. This board is available from the *EPE PCB Service*, code 394.

Mount the components in order of increasing size. Correctly observe the polarity of the diodes and electrolytic capacitor C3. A socket must be used for IC1. Do not insert the PIC until the board has been completed and fully checked.

The 7-segment l.e.d. is not mounted flush with the board. Rather, to assist viewing when walking, it is mounted on its side. The decimal points are at the lower end of the display and these should point towards the rear of the calf when strapped to the left leg. The lower pins of the display are tightly turned into the p.c.b. Small rigid extension wires link the required upper pins to the p.c.b., see Fig.3.

Connector TB1 provides the programming connection points for those who wish to program their PIC *in situ*, but note that they are not in John Becker's "standard" TK3 order. Pin RB7 is also the pin to which the sounder WD1 is connected, but the sounder should be disconnected if/when on-board programming is to be performed.

Fido was mounted in a slim-line plastic case, measuring 80mm × 62mm × 39mm, with suitable holes cut for the l.e.d.s, 7-segment display and the switches. Allow room for the battery (see later). It may also be necessary to drill small holes to let the sounder be heard. To protect Fido from rain and mud, rubber dust covers are recommended for the switches and a small piece of clear plastic should cover the 7-segment display.

COMPONENTS

Resistors

R1, R2	470Ω (2 off)
R3 to R5	1k (3 off)
R6, R7	220Ω (2 off)

All 0·25W 5% carbon film

See SHOP TALK page

Capacitors

C1, C2	15p polystyrene or disc ceramic (2 off)
C3	10μ radial elect. 10V
C4	220n disc ceramic

Semiconductors

D1, D2	red l.e.d. (low current) (2 off)
D3	1N4148 signal diode
D4	1N4001 rectifier diode (see text)
IC1	PIC16F84A microcontroller preprogrammed (see text)

Miscellaneous

X1	20MHz crystal
X2	7-segment display, common anode
S1, S2	tilt switch (2 off)
S3	s.p.d.t. centre off toggle switch, spring biassed one direction
S4	s.p.s.t. min. toggle switch
WD1	buzzer
B1	5V to 6V battery (4 x AAA), with holder and clips (see text)

Printed circuit board, available from the *EPE PCB Service*, code 394; slim-line plastic case (80mm x 62mm x 39mm); custom-made cloth pouch (see text); 18-pin d.i.l. socket; 14-pin d.i.l. socket; solder, etc.

Approx. Cost Guidance Only **£16** *excl. case & batts*

SETTING UP

Ensure the tilt switches are angled pointing slightly downwards and both l.e.d.s, D1 and D2, are off. Ensure switch S3 is centred (off). Turn Fido on in the vertical position; the sounder will then signal that the timer function has started.

Sway Fido back and forth in a motion as if it were the bob of a pendulum (which effectively is what a leg is, i.e. pivoted at the hip). Each sway will flash, in turn, the horizontal bars of the 7-segment display.

The top, middle and lower bars will not necessarily flash in a perfectly smooth sequence when swayed – this is normal. When vertical, the centre bar will flash. The l.e.d.s. D1 and D2 go on and off as appropriate when the tilt switches make and break their contacts.

Switching to Learn mode will make alignment easier, as each valid stride is signalled by a bleep, but be sure not to exceed 255 "test" steps, otherwise Fido will assume that a new stride constant is to be stored. Reset by turning off and back on again.

Note that the bleep will not always occur in exactly the same leg position. However, only one bleep should be heard per stride cycle. Adjust the tilt switch positions if necessary. Once Fido is "walking" reliably, open the box and secure the location of the tilt switches using hot melt glue.

Turning off power to the unit will reset to zero the distance and speed displays and calculations. If a new stride constant has

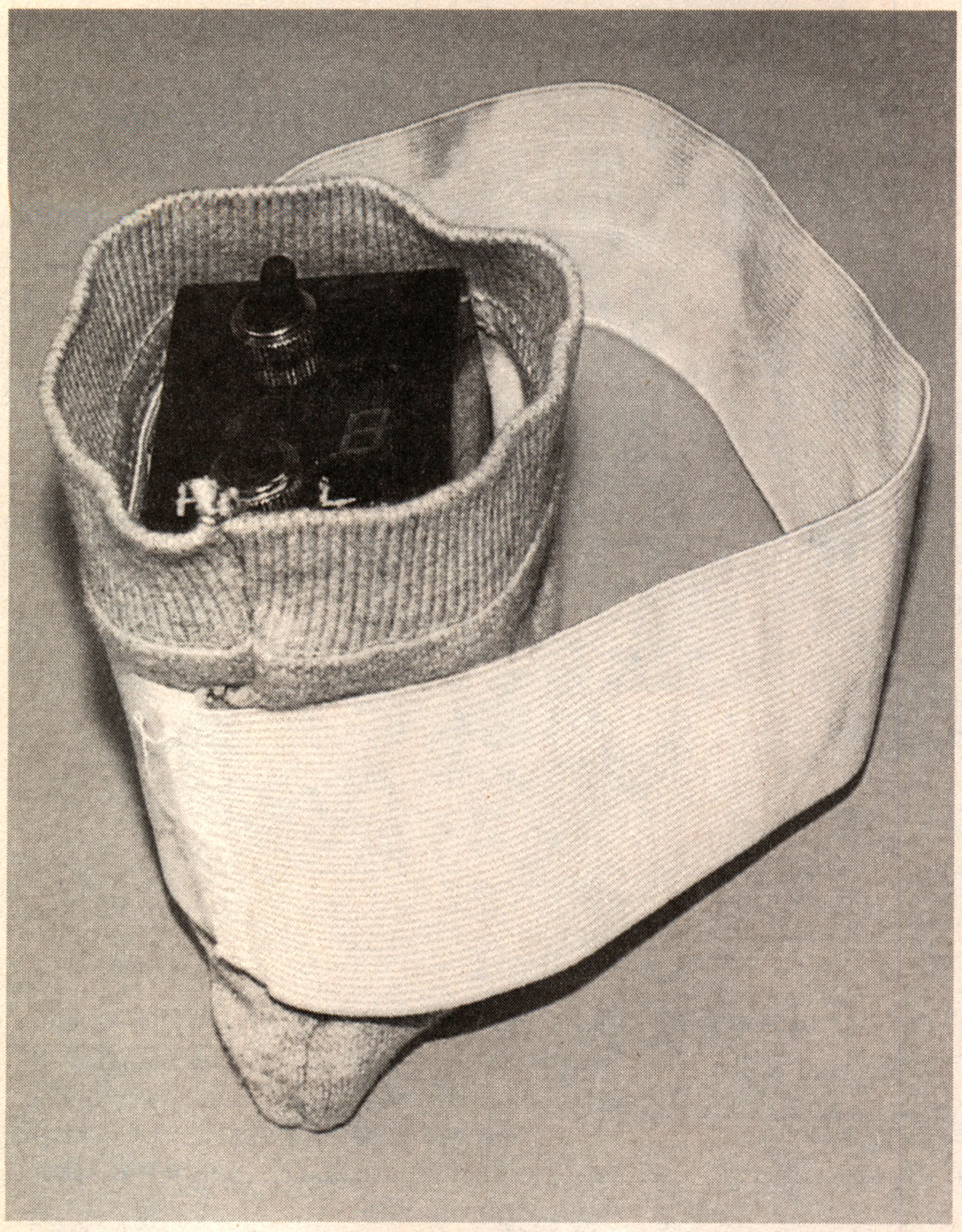

Fido's "collar", worn around the left upper calf.

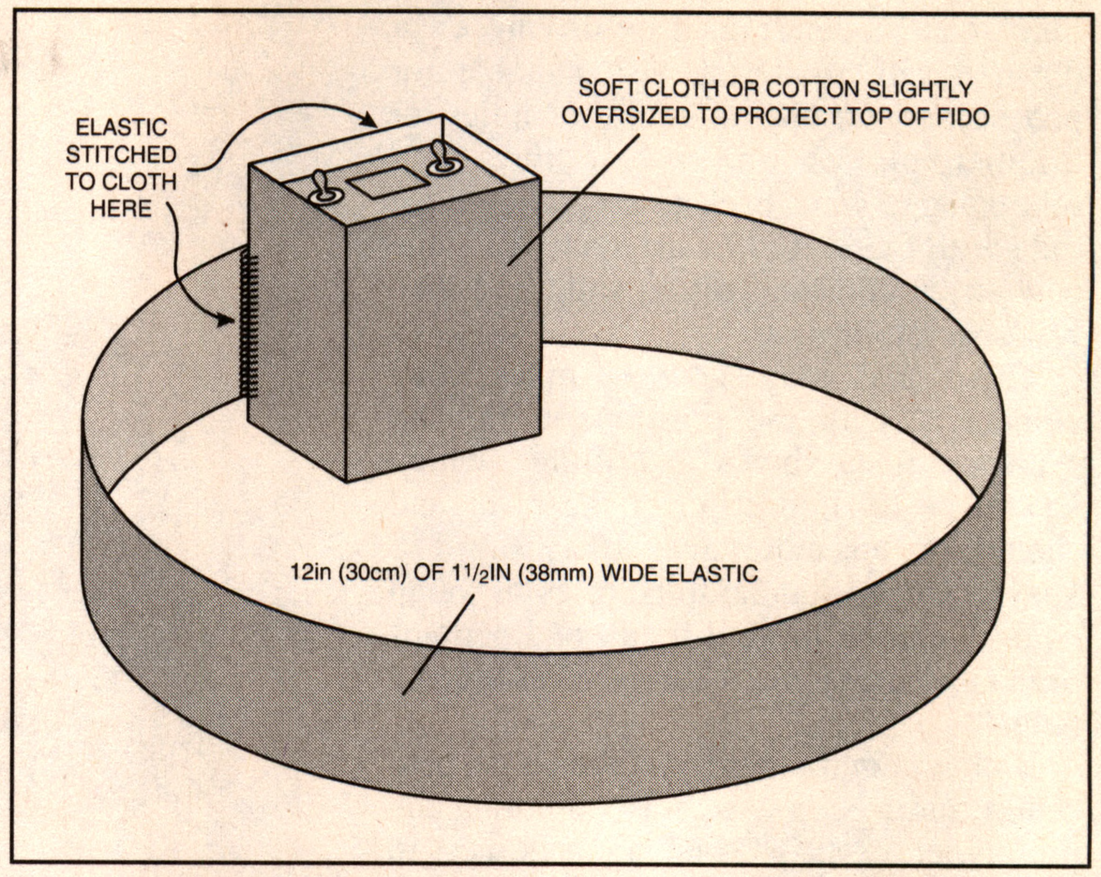

Fig.4. Construction of Fido's "pooch pouch and collar"!

Table 2. Mode Switch S3 Functions

Position	Mode	Function	Display	Tone
A	Display	Display distance/ average speed	P0-0 A0-0 ...	Silent
B	Measure	Measure distance speed	Descending bars	Every mile/km
C	Learn	Learn strides per mile/km	L and bars descending	< 255 strides 1 bleep > 255 strides 2 bleeps

been entered using Learn mode then this will be remembered despite power being turned off.

The unit can only be used on the left leg. Changing orientation would require changes to be made to the software, a matter on which no advice is offered.

The 7-segment display will not be readable from a normal standing position, so it is necessary to make a strap-on pouch to allow Fido to be lifted out and read when required. The author's arrangement is shown in Fig.4. The pouch is sewn to a loop of 50mm wide elastic. The walking boot is passed through the elastic hoop and Fido is slipped into the pouch at the top of the calf just below the knee joint.

Note that as the calf muscle is rounded, so Fido points slightly "inward" when viewed from above. This is normal, but check that Fido does not significantly shift from this position, especially when running.

FIDO'S APPETITE

Part of the design criteria for Fido assumed that it might be used in rugged and remote locations, where constant battery changes would not be welcome. When walking, the prototype consumed an average of 27mA, but by using low current l.e.d.s and "flashing" the display whenever possible, this was reduced to an average of 13mA.

The plastic case is sized to house four AAA alkaline batteries rated at 1200mA/hr. No battery duration problems have been experienced in the prototype, despite constant testing over a period of two months.

It should be noted that the PIC16F84A has a maximum supply voltage limit of 5·5V, whereas four AAA cells will nominally deliver 6V. Consequently, it is recommended that a 1N4001 rectifier diode should be inserted in the positive line between switch S4 and the p.c.b. to drop the voltage reaching the PIC by about 0·6V.

TAKING FIDO FOR A WALK

When first switched on, if Fido is not upright the display will remain blank and the timing function will be disabled. When upright, the centre bar of the display will flash and a short bleep from the sounder will indicate that the unit is now functioning.

Slip Fido into its pouch situated on the left calf and walk with Mode switch S3 in position A (centre). As progress is made, each of the horizontal bars of the 7-segment display will flash as each stage of a valid walk cycle is detected. When stationary and vertical, the middle bar will flash at about 1Hz.

Next, Mode switch S3 can be tested. It is a 3-position (centre-off) toggle switch. Position A is "spring return loaded". Its functions are shown in Table 2.

Display Mode (S3-A)

Only when Fido is in the vertical position (middle bar flickering) can switch position S3-A be "pulsed". This will trigger a display cycle on the single digit 7-segment display, showing progress (distance covered) and average speed.

If Fido has been calibrated in miles, the letter P (progress) is displayed first, followed by the miles units, then a decimal point (a dash) followed by tenths of a mile. After a short pause, the letter A (average speed) is displayed and the average speed in miles/hour is shown in the same format as distance. If the distance or speed exceeds 9·9 then the tens of miles digit will automatically appear.

Once a display cycle is completed, the unit will return to measure mode.

Measure Mode (S3-B)

When switch position S3-B is selected (centre), Fido silently counts strides and displays each stage of a valid leg movement by flashing the top, middle and lower bars of the 7-segment display. Every mile (or kilometre) is signalled with a long bleep from the sounder.

Learn Mode (S3-C)

Fido has been programed with a default value of stride constant (2280 strides/mile, level ground, walking), but it will probably be necessary to readjust this constant. To make the adjustment, Learn mode needs to be selected by setting the Mode switch to position S3-C.

A distance of one mile, or one kilometre, should now be walked or run. The display will show the normal "descending bars" indicating a valid stride, but this will be accompanied by a bleep and the letter L on the display.

To avoid the accidental selection of Learn mode (and hence entering incorrect data), Fido will only commence remembering the stride count after 255 strides have been completed. When more than 255 strides have been recorded, each stride will be followed by two bleeps to indicate that Fido is now recording a "live" stride constant value.

Once the standard distance has been covered, switch to normal walk mode (Measure – S3-B) and walk a few paces. Check the descending bars are visible again and no bleep is present. Switch Fido off, wait a couple of seconds to let capacitor C3 discharge, and then switch back on. Henceforth only the new stride constant will be used (until such time as you might choose to change it, in the same way as just described).

If possible, "train" Fido in the type of terrain in which it will be used. A "standard

mile" can be determined by driving a car down a safe road (i.e. also suitable for pedestrians) for one mile (or 0·62 miles for kilometres), as shown on the car's mileometer. Walk back to the start of the mile with Fido set to Learn mode. Save the new stride constant, restart Fido and then walk back to the car.

The display may show 0·9 miles when coincident with the position of the car. Walk until it shows 1·0 miles, which should be an indication of the error and should be no more than 10%, say 170 yards. Getting standard distances in rough country can be more difficult and perhaps ordnance survey maps can be of assistance here.

Both a gym treadmill and the above procedure have been used for calibrating the prototype. Tests showed an accuracy to within 10% for distances greater than 1·0 miles.

The conversion between miles and kilometres is:

Miles to kilometres multiply by 1·609
Kilometres to miles multiply by 0·621

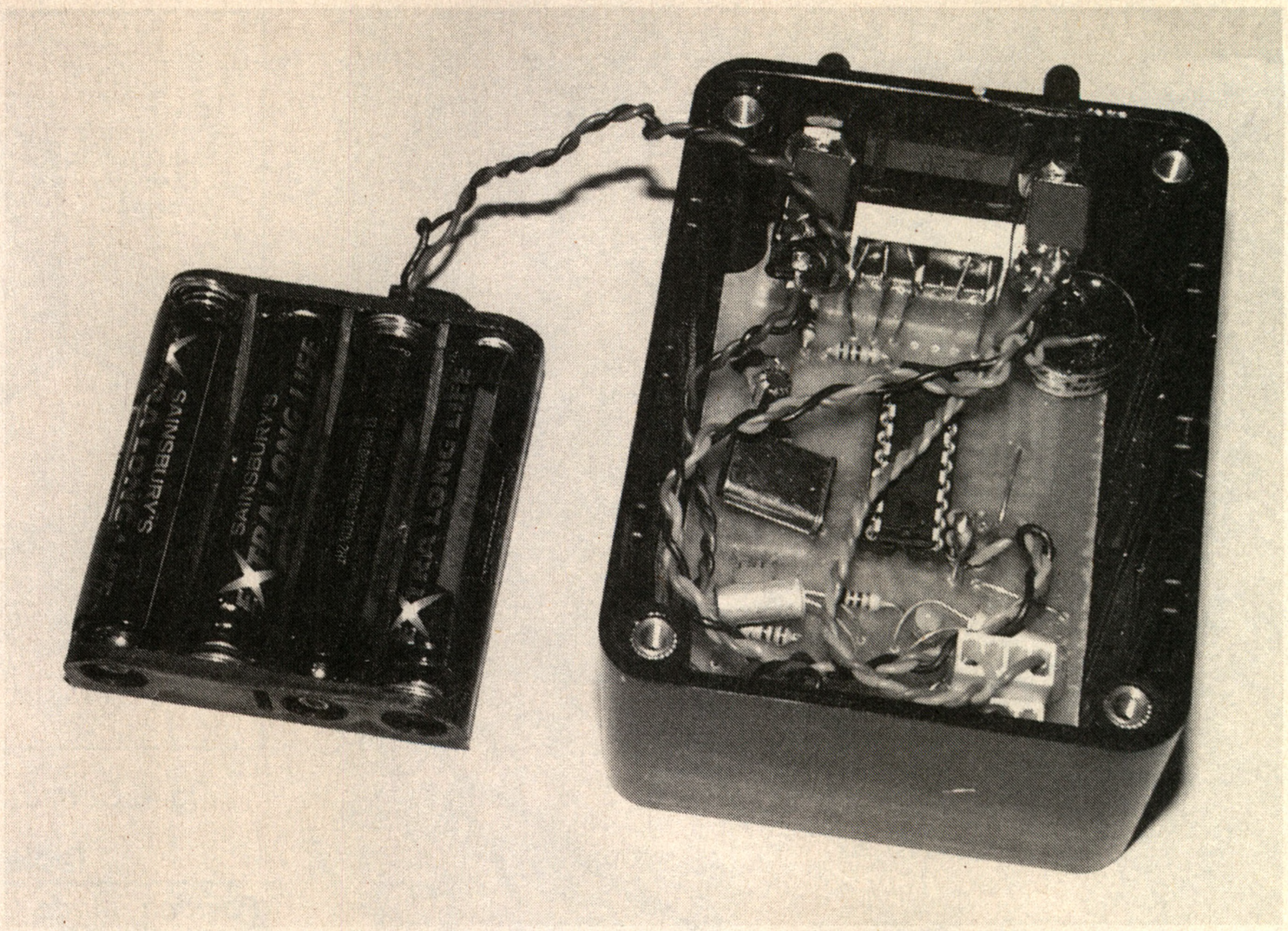

FURTHER IDEAS

Fido can potentially record any repetitive leg movement providing the set-up and calibration are adjusted. Experiments are currently underway to adapt Fido to measure the "stroke rate" and performance profile of club standard rowers.

FURTHER READING

Although this design is simply PIC-based, readers may be interested to read about the ADXL202 accelerometer device, in particular *Using the ADXL202 in Pedometer Applications*, Harvey Weinberg, via **www.Parallex.com**. ADXL202 device information is available from **www.Analog.com**. □

SHOP TALK
with David Barrington

PICronos L.E.D. Wall Clock

The first observation one makes when scanning down the parts list for the *PICronos L.E.D. Wall Clock* is that quite a cash saving can be made if readers approach some of our components advertisers and do a bit of "arm-twisting" and negotiate a special "bulk discount" on the ultrabright l.e.d.s. If you order 200, as the author did, they should certainly be able to offer you a good price, and possibly include different colours as well.

It is important that constructors keep to the specified semiconductor devices for the Clock. The L293DN 16-pin Half-H driver chip (also referred to as a stepper motor driver i.c.) was purchased from **Rapid Electronics** (☎ ***01206 751166*** or ***www.rapidelectronics.co.uk***), code 82-0192. The "D" denotes it is a 16-pin device. Do *not* use other L293 device types as they may not have the same characteristics – for instance, the L293E has 20 pins and cannot be used. (Check out the Texas web site at: **www.ti.com**.)

The 7-stage Darlington line driver type ULN2004A was also ordered from the above company, code 82-0622. It is also listed by **RS Components** (☎ ***01536 444079*** or ***rswww.com***, credit card only – a p&p charge will be made), code 652-825. RS also supplied the rail-to-rail LMC6484 quad op.amp, code 310-925.

For those readers unable to program their own PICs, a ready-programmed PIC16F877-4 microcontroller can be purchased from **Magenta Electronics** (☎ ***01283 565435*** or ***www.magenta2000.co.uk***) for the inclusive price of £10 each (overseas add £1 p&p). The software is available on a 3·5in. PC-compatible disk (Disk 6) from the *EPE Editorial Office* for the sum of £3 each (UK), to cover admin costs (for overseas charges see page 434). It is also available for free download from the *EPE* ftp site, which is most easily accessed via the click-link option on the home page when you enter the main web site at ***www.epemag.wimborne.co.uk***. On entry to the ftp site take the path **pub/PICS/PICronos**.

The large circular printed circuit board for the Clock is available from the *EPE PCB Service*, code 395 (see page 434).

Fido Pedometer

Apart from the PIC microcontroller and associated software, only the tilt switches called for in the *Fido Pedometer* project are likely to cause any real concern.

Due to the robust treatment of Fido, when taken for "walkies", and the dangerous toxic nature of mercury, we feel readers should make every endeavour to keep well clear of using mercury-filled tilt switches. Instead, we recommend readers use one of the hermetically sealed *non-mercury* types. A suitable switch is "currently listed" by **Maplin** (☎ ***0870 2263 6000*** or ***www.maplin.co.uk***), code DP50E.

The above company also supplied the sub-miniature centre-off, biassed one way, toggle switch (code FH02C) and a suitable waterproof toggle switch cover (two needed – code JR79L). The plastic box is left to individual choice.

For those readers unable to program their own PICs, a ready-programmed PIC16F84A microcontroller can be purchased from **Magenta Electronics** (☎ ***01283 565435*** or ***www.magenta2000.co.uk***) for the inclusive price of £5.90 each (overseas add £1 p&p). The software is available on a 3·5in. PC-compatible disk (Disk 6) from the *EPE Editorial Office* for the sum of £3 each (UK), to cover admin costs (for overseas charges see page 434). It is also available for free download from the *EPE* ftp site, which is most easily accessed via the click-link option on the home page when you enter the main web site at ***www.epemag.wimborne.co.uk***. On entry to the ftp site take the path **pub/PICS/FidoPed.**

The printed circuit board is available from the *EPE PCB Service*, code 394 (see page 434). The 7-segment common anode display should be in abundant supply, but you will need to check the pinout arrangement before making a purchase.

Back-To-Basics 5 – Mini Theremin/Twilight Switch

The only item that readers will experience problems finding for the *Mini Theremin*, one of this month's *Back-To-Basics* projects, is the specified Toko RD7 i.f. transformer, which is usually used in radio receivers.

Having had problems in the recent past trying to locate sources for Toko coils, it is fortuitous that the author (Raymond Haigh) of the new *Practical Radio Circuits* series has given us the names of two stockists. They are: **JAB Electronic Components, Dept *EPE*, PO Box 5774, Birmingham, B44 8JP** (☎ ***0121 682 7045*** or ***www.jabdog.com*** – they appear to only deal with mail orders) and **Sycom, Dept *EPE*, PO Box 148, Leatherhead, Surrey, KT22 9YW** (☎ ***01372 372587*** or ***www.sycomcomp.co.uk***). We also understand from Raymond that the main UK Toko supplier is **Coils-UK** (☎ ***01753 549502*** or ***www.coils-uk.com***), but that they are only into "bulk orders".

All the semiconductor devices for both of this month's projects should be widely stocked by our components advertisers. They should also carry the ORP12 light-dependent resistor or its derivative used in the concluding *Twilight Switch*.

Practical Radio Circuits – 1

No difficulties should be encountered in obtaining components for the *Practical Radio Circuits* series of projects and any that could possibly cause concern will be highlighted each month.

We "kick-off" the series with a simple *Crystal Set Radio*, a *TRF Receiver* and a single transistor *Headphone Amplifier*. The Crystal Set and TRF Receiver both use the same polythene dielectric tuning capacitor and ferrite rod coil.

The tuning capacitor will normally be found listed as a miniature "transistor radio" type and is currently stocked by **ESR Components** (☎ ***0191 251 4363*** or ***www.esr.co.uk***), code 896-110 and **Sherwood Electronics** (see ad. on page 440), code CT9. The ferrite rod for the aerial/tuning coil should be easy to come by, it is certainly listed by Sherwood (code FR1) and we note **WCN Supplies** (☎ ***023 8066 0700***) are offering a 140mm x 10mm rod, with a coil (unwanted).

For the 26s.w.g. enamelled copper wire, the author obtained a 50g (2oz) reel from **JAB Electronic Components** (☎ ***0121 682 7045*** or ***www.jabdog.com***). We also understand **J. Birkett Supplies** (☎ ***01522 520767***) stock 50g reels. Most suppliers only sell "large" reels.

The MK484 radio i.c. is stocked by ESR Components (see above) and **Rapid Electronics** (☎ ***01206 751166*** or ***www.rapidelectronics.co.uk***), code 82-1026. Any point-contact germanium diode should prove suitable for the detector in the Crystal Set; e.g. the OA47, OA90 and OA91, and any silicon signal diode can be used for D1 and D2 in the TRF Receiver, e.g. 1N4148, 1N914, 1N916.

The two small printed circuit boards are obtainable from the *EPE PCB Service*, codes 392 (TRF Rec.) and 393 (Headphone), see page 434.

PLEASE TAKE NOTE

Toolkit TK3 *(Oct/Nov '01)*

Version V1.42 of the TK3 programming software is now on our ftp site. It has had the following facilities added:

- Recognition of Macro functions
- Use of LOCAL in the context of Macro addresses in relation to HIGH and LOW functions
- Recognition of IFDEF and ENDIF functions
- Calculator for PIC Baud rate register values