# HUMIDITY MONITOR

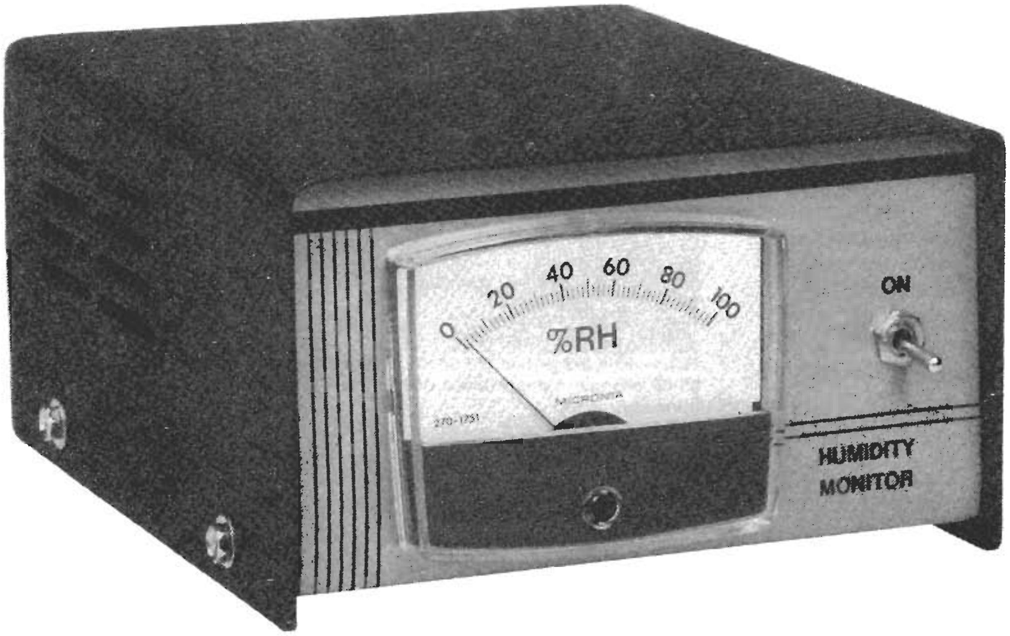

*Don't let static zap your costly electronic gear! This electronic humidity monitor lets you spot potentially dangerous conditions.*

MARK C. WORLEY

IF YOU'RE LIKE MANY PEOPLE, YOU TEND to downplay—or simply ignore—the importance of humidity. But you shouldn't! The reason is that, after temperature, humidity is the most important environmental condition that affects our comfort level. We're comfortable when the humidity is low in the summer, but that same low humidity can make us feel uncomfortably cool in the winter.

Perhaps more important to the readers of **Radio-Electronics** is the fact that humidity—or the lack of it—can drastically affect the operation of the electronic devices we love so well: computers, TV's, VCR's, stereos, etc. Proper humidity control in the winter months can reduce the static buildup that is so often detrimental to the operation of electronic equipment. For example, a rule of thumb states that you should be careful when the humidity drops below about 50% as the temperature drops below about 70°. You certainly wouldn't want to handle any CMOS IC's in those conditions!

In order to help you bring your humidity problems under control, we will discuss what humidity is, some of its effects, and several historical means of measuring it. Then we'll show you how to build a modern, electronic humidity monitor that features 5% accuracy for about $50.

## What is humidity?

Humidity is usually specified as percent *R*elative *H*umidity, or RH, for short. Relative humidity is not a *measurement* of the amount of water vapor in the air. Rather, RH is the ratio of the amount of water vapor in the air to the maximum amount of vapor that air can hold. That maximum varies primarily with temperature, although barometric pressure affects it to a lesser degree.

For example, let's assume that a given volume of air at a given temperature can hold one ounce of water vapor. If that air contains half an ounce of water, its relative humidity is 50%. If that same volume of air were cooled, it might be able to hold a maximum of only $\frac{6}{10}$ an ounce of water. So if that air still contained half an ounce of water, the relative humidity would now be $0.5 \div 0.6$, or 83.3%.

On a hot day the relative humidity governs our comfort primarily because it affects the efficiency of our natural cooling system—our sweat glands. If the humidity is high, sweat can't evaporate as readily. That's why a hot, dry day is more comfortable than a warm, humid day. Various "comfort zone" charts have been developed that show which combinations of temperature and humidity are the most comfortable.

The effects of humidity are evident all around us. For example, dew is caused by cooling of the air during the night until it saturates (reaches 100% RH), and it then releases excess moisture onto any cool surface. The temperature at which that saturation occurs is called the *dew point*.

Here's another common effect of humidity: iced drinks that "sweat" on a hot day. That "sweating" is really caused as follows. The outer surface of the glass is cooled by the icy contents of the glass. That surface in turn cools the surrounding air.

When that air reaches the dew point temperature, it releases some of its excess moisture onto the surface of the glass. So in reality that "sweating" is not perspiration from the glass, but condensation from the atmosphere. Hence the reason cold drinks don't "sweat" as much in dry climates as they do in humid ones is that there's very little water in the air to condense on the glass.

## Measuring humidity

Temperature is easy to measure using a simple thermometer, or any of a number of solid-state devices. Humidity, on the other hand, is probably the most difficult environmental condition to measure. The search for an accurate, dependable means of measuring humidity has occupied scientists for centuries. For example, Leonardo Da Vinci noticed in 1550 that a ball of wool weighed more on a rainy day than on a dry day. Ever since then scientists have been refining ways of measuring RH precisely. For example, methods using various organic substances, electro-optical sensors, resistive sensors, and variable-capacitance sensors have been developed. Each method has unique advantages and disadvantages.

Organic sensors like human hair, animal hair, and animal membranes have been in use the longest, and are still in use today. An organic tissue absorbs moisture readily, and, as it does, it will stretch more easily. That stretching can be measured, and that provides an indirect indication of RH. As you might suspect, the primary disadvantage of organic sensors is their tendency to age rapidly, and that requires frequent re-calibration.

Relative humidity can also be calculated by measuring the dew point. The dew-point method is highly accurate, but cumbersome, because of the cleanliness, and the complex, precise circuitry that are required. A mirrored surface is monitored as it cools until moisture begins to form on it. The temperature at which moisture is detected is the dew point, and that is dependent upon relative humidity. The dew-point method is most suitable for laboratory work.

Resistive sensors have their problems, too. The resistance of that sort of sensor usually ranges from the hundred of thousands of ohms to the tens of megohms. That high resistance, plus the non-linear response curves of those sensors, makes them difficult to work with. In addition, they can be damaged by direct contact with moisture, by common airborne contaminants, or by simple DC voltages. Most sensors require an AC excitation voltage, because even a small DC voltage can cause chemical migration within the sensor, and that usually ruins it.

Another humidity sensor is based on variations in capacitance. Sensors of that type weren't commonly used in the past because of their high cost—typically $100 or more apiece—and because they can be difficult to use due to their small variation in capacitance. However, the sensor shown in Fig. 1, developed by the N. V. Philips Company, and sold in this country by Mepco/Electra (Columbia Road, Morristown, NJ 07869), is inexpensive and easy to work with.

## The sensor

Philips' humidity sensor is a capacitor formed from a dime-sized piece of plastic film that is coated on both sides with a very thin layer of gold. Because the dielectric constant of that film varies with changes in RH, so does the sensor's capacitance. On each side of the film the gold functions as one plate of a capacitor; it also provides the electrical contact for the sensor-housing's spring-contact leads. The sensor measures about 0.6" in diameter, and 0.9" high. We list some of the specifications of Philips' sensor in Table 1. For more information, see Mepco's Technical Information Brochure 063, their Technical Note 134, and the data sheet that comes with the sensor.

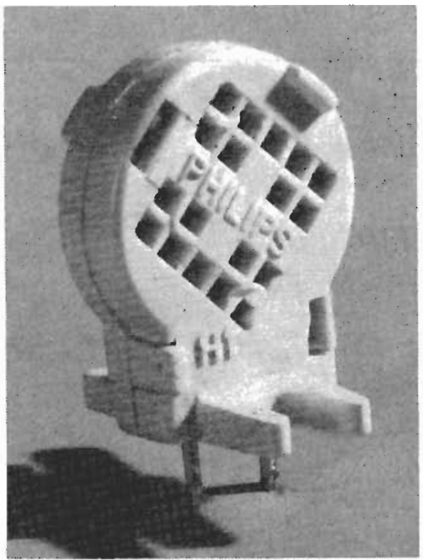

**FIG. 1—PHILIPS' HUMIDITY SENSOR provides a 45-pF change in capacitance over the 0–100% humidity range.**

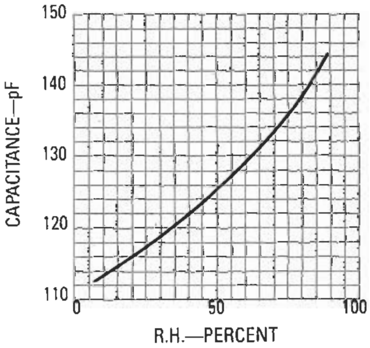

**FIG. 2—THE SENSOR'S CAPACITANCE and the relative humidity are related exponentially.**

The curve in Fig. 2 shows how the sensor's capacitance varies with humidity. By extrapolating a little we see that capacitance varies from about 115 pF at 0.0% RH to about 160 pF at 100% RH. In other words, there is a change in capacitance of 45 pF over the entire RH range. So, in order to measure RH, all we need is a circuit that translates that 45 pF variation in capacitance to a properly scaled variation in voltage.

But before we discuss the details of circuit operation, there are a few other things you should know that affect the accuracy obtainable from our humidity monitor. First, the sensor has a drift of 0.1% per degree Celsius, which translates to an inaccuracy of 1% for a 10°C change in temperature. So, over a range of 40°C, accuracy will drop to about 4%. Given proper calibration, our humidity monitor should be accurate, therefore, to better than 5% RH over a wide temperature range. Just compare that to the typical 25% accuracy—or worse—of the dial-type humidity indicator included with many wall- and desk-top thermometer-barometer-humidity monitors! You should also be aware that the capacitance of the sensor is somewhat dependent upon the frequency applied to it, but to obtain the accuracy we're interested in, we can ignore that variation.

## Circuit operation

If we were simply to build an oscillator whose frequency varied in response to changes in the sensor's capacitance, we could measure relative humidity, but we'd have an offset problem, because 0.0% RH corresponds to 115 pF, not 0.0 pF. In other words, we'd have some output even at 0.0% relative humidity. So we use *two* oscillators in our circuit, and measure the *difference* between their outputs. That allows us to obtain an output of 1.00 volt for 100% RH.

Our circuit is a modified version of one supplied by Philips. In their circuit, one 4001 CMOS quad-NOR package was used to build the two oscillators, and the gates in a second 4001 were connected in parallel to provide extra drive for the rectifier/filter circuit. We decided to use 7555's for the oscillators because they're only slightly more expensive, but much more

**TABLE 1—SENSOR SPECIFICATIONS**

| Parameter | Value |
|---|---|
| Humidity range | 10–90% RH |
| Temperature range | 0–85°C |
| Capacitance (25°C, 43% RH, 100 kHz) | 122 pF, ±15% |
| Frequency range | 1–1000 kHz |
| Temperature dependence | 0.1% RH/°C |
| Response time (max)* | |
| 10–43% RH | 3 minutes |
| 43–90% RH | 5 minutes |
| Typical hysteresis | 3% |
| Maximum voltage | 15 volts |

*To 90% of final value, @ 25°C, in circulating air

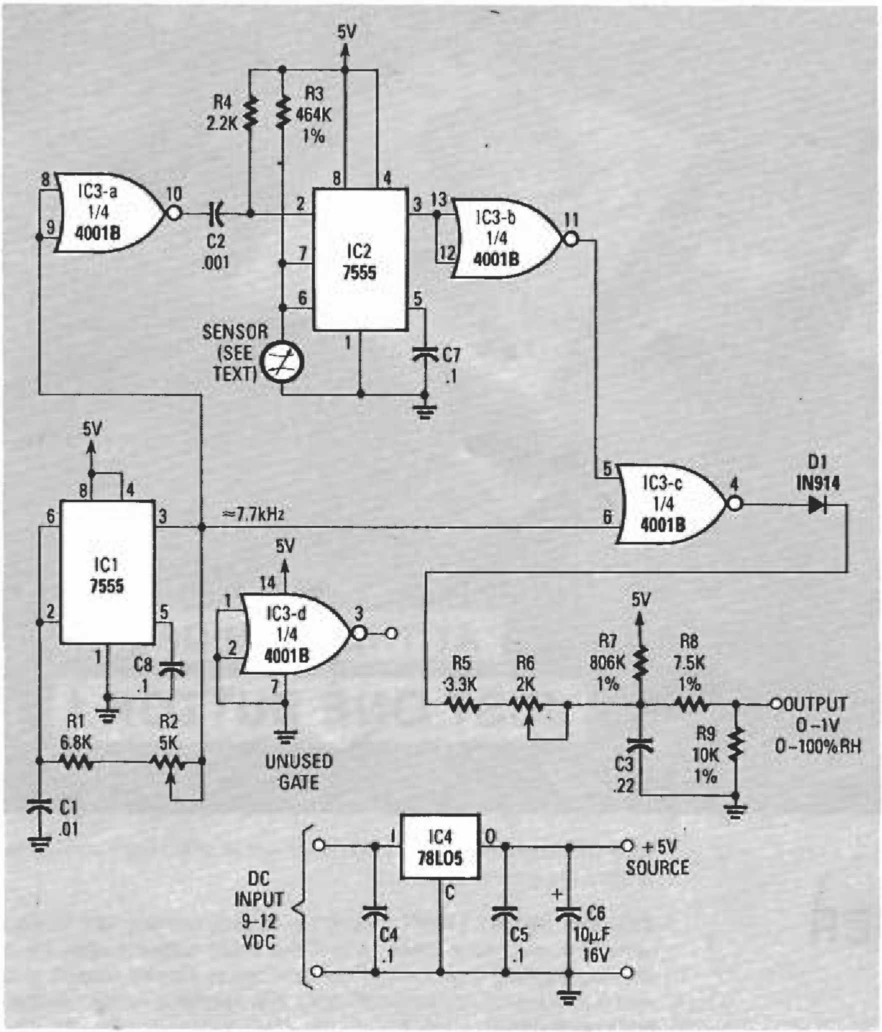

FIG. 3—THE HUMIDITY MONITOR CIRCUIT uses CMOS 555's to keep current drain low.

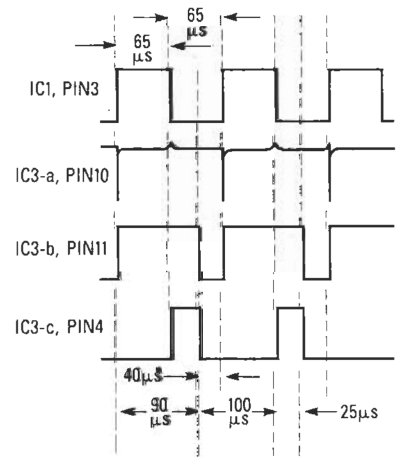

FIG. 4—TIMING RELATIONSHIPS of various points in the humidity monitor's circuit are shown here.

predictable (and repeatable) than oscillators made from CMOS gates. Also, we found that it was unnecessary to use paralleled gates to drive the metering circuit.

As you can see from the schematic in Fig. 3, our humidity monitor is composed of three CMOS IC's and a low-power voltage regulator. Total current drain is only about 5 mA, so battery operation is entirely feasible. The circuit consists of two oscillators, a few NOR gates, and a detector/filter circuit that helps linearize the output.

A CMOS 7555 is used for IC1, a 7-kHz astable oscillator. A CMOS 7555 is also used for IC2, a one-shot whose pulse width is determined by R3 and the capacitance of the sensor. The master oscillator (IC1) drives IC3-a, which provides the trigger pulse that drives IC2. The relationship of those two signals, and the others to be discussed below, is shown in the timing diagram in Fig. 4.

The output of IC2 is inverted by IC3-b and combined with the master-oscillator signal by IC3-c, which passes only the difference between the two signals to the filter/detector circuit that follows. Trimmer potentiometer R2 is provided to null the circuit out at the low end of the RH scale. On a dual-trace scope the null condition appears as equal-phase, equal-width pulses at pins 5 and 6 of IC3-c. With inputs of that sort, IC3-c gives no output.

The detector circuit is composed of diode D1, resistors R5–R9, and capacitor C3. The pulses from IC3-c are rectified and filtered into a DC voltage that is proportional to relative humidity. Full-scale meter adjustment is provided by R6, and R8 and R9 function as a voltage divider that scales the output to exactly one volt at 100% RH.

Since the sensor's capacitance is exponentially related to RH, something is needed to increase the linearity of the circuit. That something is provided by R7, which supplies extra charging current to C3, which would normally be fed only by the detector. Also, R8 and R9 discharge C3 to further increase linearity. The only drawback to our scheme is that, due to the voltage-divider effect of R7–R9, the out-

### PARTS LIST

**All resistors ¼-watt, 5%, metal film (not carbon composition!) unless otherwise noted.**

R1—6800 ohms
R2—5000 ohms, linear potentiometer, PC mount
R3—464,000 ohms, 1%, ¼-watt
R4—2200 ohms
R5—3300 ohms
R6—2000 ohms, linear potentiometer, PC mount
R7—806,000 ohms, 1%, ¼-watt
R8—7500 ohms, 1%, ¼-watt
R9—10,000 ohms, 1%, ¼-watt

**Capacitors**

C1—0.01 µF, 10%, mylar or polycarbonate
C2—0.001 µF, 10%, mylar or polycarbonate
C3—0.22 µF, 10%, mylar or polycarbonate
C4, C5, C7, C8—0.1 µF, ceramic, monolithic, or disc
C6—10 µF, 16 volts, electrolytic or tantalum, radial leads

**Semiconductors**

IC1, IC2—7555 CMOS 555 timer
IC3—4001B, CMOS quad dual-input NOR gate
IC4—78L05, 5-volt, 100-mA voltage regulator
D1—1N914, 1N4148, or equivalent

**Other components**

M1—50 µA, Radio Shack #270-1751
S1—SPST toggle or momentary switch
Sensor—Mepco #2322-691-90003
Sensor socket—Molex part #10-18-2031
Portable case—Radio Shack #270-1751
Outdoor case—Keystone part #677 (set of #666 & #685)

**Note: The following are available from Mark Worley, 909-B Country Aire, Round Rock, TX 78664: Screened, drilled, and plated PC board, $7.00; Sensor $15.00 for 1 or $25.00 for 2; Calibration capacitors (115 pF and 160 pF, 1% mica), $2.00 per set; Kit of IC's, sensor, sensor socket, PC board, resistors, and capacitors, $40.00 (calibration capacitors, meter, enclosure, & hardware not included). Add 10% for shipping, $3.00 maximum. Most orders shipped within 1 week, but allow up to 30 days for delivery. Send cash or check only.**

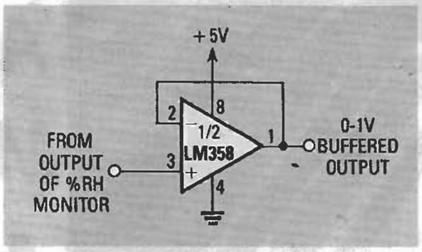

**FIG. 5—AN OP-AMP VOLTAGE FOLLOWER may be used to buffer the output of the humidity monitor.**

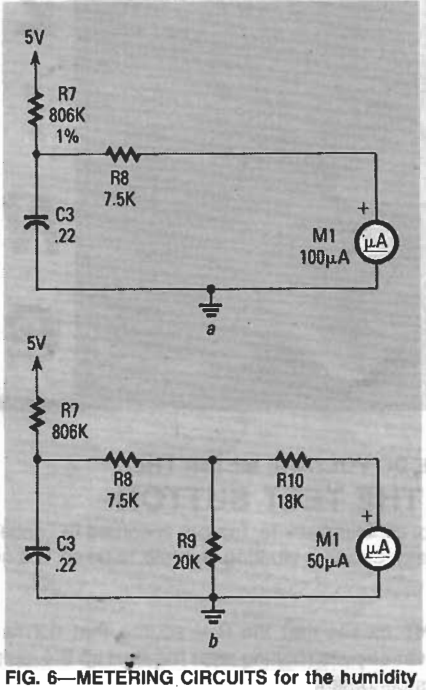

**FIG. 6—METERING CIRCUITS for the humidity monitor. Use the circuit shown at *a* with a 100-µA meter, and the one at *b* with a 50-µA meter.**

put cannot fall below 60 mV, which corresponds to 6% RH. So, our monitor can read no lower than 6% RH.

For best accuracy, the output should be monitored with a meter having an input impedance of at least one megohm. Alternatively, the output could be buffered to drive an analog meter or other low-impedance load. The simple op-amp voltage-follower circuit shown in Fig. 5 could be powered by the same (battery) supply that powers the remainder of the circuit. Or you could, if desired, substitute a pre-assembled digital LED- or LCD-meter module.

Another alternative would be to use a 100-µA moving-coil meter as an indicator. Since a 100-µA meter with a full-scale reading of one volt has a resistance of 10K, it could replace R9 in the circuit, as shown in Fig. 6-*a*. But since a 100-µA meter is slightly difficult to obtain, we used a 50-µA meter with the voltage divider shown in Fig. 6-*b* for our prototype.

## Current drain

The 78L05 low-power voltage regulator adds about 4 mA of current drain to the circuit, which would otherwise consume only about 1.5 mA. That 4 mA is the regulator's required operating current, so it can't be eliminated (unless you can obtain one of National's new micro-power voltage regulators). A Zener diode would not alleviate the current-drain problem, since it would require even more operating current. A Zener diode would also have poorer regulation, which could affect accuracy. With no voltage regulator at all, the pulse height from IC3-c would vary with battery voltage, so accuracy would be affected.

For portable or occasional use, a 9-volt battery is the ideal power source, since current drain is low. Alternatively, power could be supplied by an inexpensive wall-mount transformer with an output of 7.5- to 12-volts DC. For permanent outdoor installation, mount the power supply inside the house, not out in the weather.

## Construction

Our humidity monitor can be used in a portable mode both indoors and outdoors. However, for permanent outdoor installation more rugged construction techniques will have to be used. We'll present plans for both portable and permanent units, although we'll stress construction of the portable unit.

The circuit should be built on a PC board to minimize stray capacitance that could affect IC1's output frequency and IC2's pulse width. You can purchase a PC board from the source listed in the Parts List, or you can etch and drill your own using the foil patterns shown in the "PC Service" section of this magazine. It's not recommended, but if you assemble the circuit on perf board, use the kind that has a solder pad around every hole (such as OK Industry's #A-PC-02 prototyping board). You may have trouble experimenting with our circuit on a solderless breadboard because that type of breadboard has a large amount of distributed capacitance and a ground plane that can also affect circuit operation.

Use only high-quality, low-temperature-coefficient components to limit the effects of temperature on the circuit's accuracy. Capacitors C1 and C2 should be polystyrene or polycarbonate types. It might be worthwhile experimenting with a positive-temperature-coefficient capacitor for C1 to offset some of the sensor's

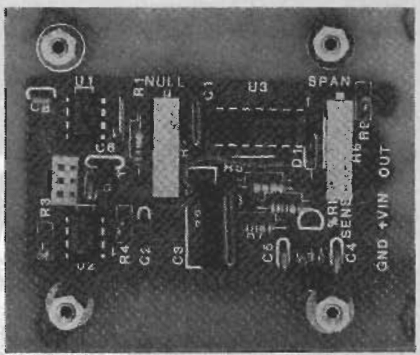

**FIG. 8—YOUR COMPLETED PC BOARD for the humidity monitor should appear as shown here. Interconnecting wires attach to the bottom of the board.**

temperature drift, especially if the monitor will be used outdoors. The resistors should be metal- or carbon-film types; carbon composition resistors should not be used in our circuit because their values vary widely with temperature and humidity.

When you have a suitable board, use the parts-placement diagram in Fig. 7 and the photo in Fig. 8 to mount and solder all components. Don't use IC sockets since they can contribute to stray capacitance. Solder the 3-pin Molex socket to the board vertically (as shown in the photo) if you want to mount your sensor as it is in our prototype. Also, for proper vertical clearance you may find it necessary to use a small tantalum capacitor for C6, or to mount that capacitor to the foil side of the PC board.

After mounting all components, check your work carefully, looking for solder bridges between adjacent pads, pins and traces. If the board is OK, remove all flux from it. Be careful to keep any solvent—particularly acetone—away from the sensor. Use isopropyl alcohol to remove finger oils, and avoid touching cleaned surfaces.

Use a pair of clipped-off resistor leads to extend the lengths of the sensor's leads. Carefully solder the wires to the sensor, and make sure you don't damage the sensor from too much heat! Then clip the leads to an overall length of ¼ inch. They will project through the case and into the Molex socket after final assembly.

Now let's turn to mechanical construction. First we'll discuss the portable unit. Drill a mounting hole in each corner

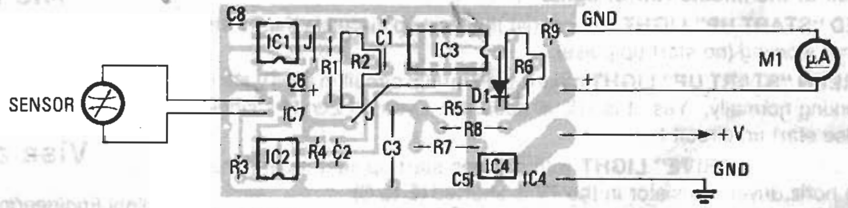

**FIG. 7—PARTS-PLACEMENT DIAGRAM reveals the compact size of the humidity monitor.**

sure some voltage across R9 (in other words, M1, if installed, should deflect); that voltage should rise if you breathe on the sensor.

If you get no output, re-check your work, and verify that supply voltage (five volts) appears at pin 8 of IC1, pin 8 of IC2, and at pin 14 of IC3. If that voltage is present, use an oscilloscope to verify the presence of the waveforms shown in Fig. 4. After the board is debugged, allow it to cool down from the heat of soldering before doing the final calibration. Also, isolate the sensor from hand and breath moisture until it stabilizes to ambient humidity—about 5 minutes should do it.

## Calibration

For the first step of calibration we'll assume that the sensor's output exactly matches the curve shown in Fig. 2. Doing that allows us to substitute 1% silver-mica capacitors for the sensor. Insert a 115-pF capacitor into the sensor's socket and adjust R2 for a reading of 6% RH (60 mV). Then replace that capacitor with a 160-pF unit and adjust R6 for a reading of 100% RH (1.00 volt).

After assembling the case, you will need to re-adjust R2 so that the output agrees with a secondary humidity standard. That adjustment alters IC1's pulse-width to correspond to the sensor you're using. Remember, the Philips sensors have a tolerance of ±15% at 43% RH. This means that, although there will still be a 45-pF change in capacitance over the entire 0–100% range of RH, the high and and low values may be shifted above or below the nominal values. It is R2 that provides compensation for that shift.

## Absolute calibration standards

Finding a humidity standard can be difficult, but here are a few ideas that may be useful. The most common method of measuring humidity accurately is with a sling psychrometer. You may be able to borrow one from a science or chemistry lab at a local high-school or college. The sling psychrometer has both dry- and wet-bulb thermometers. The wet-bulb unit has a wick on its bulb that is moistened with distilled water. When the psychrometer is whirled in a circle, the evaporation of the wick cools the thermometer's bulb. The amount it cools depends on the amount of water that evaporates, and that is governed by the amount of moisture in the air—the relative humidity.

The dry-bulb thermometer is unaffected by that procedure since it's not moistened; it simply indicates the temperature of the ambient air. With every psychrometer comes a chart that allows you to determine RH from the readings on the two thermometers.

The accuracy of the sling psychrometer method depends on the accuracy of the two thermometers, the accuracy with which they're read, the cleanliness of the wick and the water, and also upon a sufficient quantity of air blowing across the wick. Small sling psychrometers with one degree increments and short thermometers have an accuracy of only 10%, or worse.

**TABLE 2—SATURATED SALT SOLUTIONS**

| Salt | % RH @ 68°F | % RH @ 77°F |
|---|---|---|
| Lithium Chloride Monohydrate | 11.3 | 11.2 |
| Magnesium Chloride Hexahydrate | 33.1 | 32.8 |
| Magnesium Nitrate | 54.4 | 52.9 |
| Sodium Chloride | 75.5 | 75.3 |
| Potassium Chloride | 85.1 | 84.3 |
| Potassium Sulphate | 97.6 | 97.3 |

Saturated salt solutions offer better accuracy, but they are more difficult to use because the sensor has to be placed as close as possible to the solution without touching it, and the calibration process must occur inside an airtight container. That can make circuit adjustment awkward. Anyway, the solution maintains an equilibrium of humidity within the sealed container as long as that solution remains saturated. Both salt and water must be pure for best accuracy. We list some commonly-used solutions, and the humidities you can obtain with them, in Table 2.

**Caution:** Those solutions are poisonous, so handle and store them with care, and keep them out of the reach of children and pets. If you use the lithium chloride solution, don't allow it to fall below a temperature of 18°C (64°F), since the humidity reference of the solution will be permanently altered. Whichever salt you use, stir in crystals a little bit at a time until precipitates begin collecting on the bottom of your container. When you're sure no more salt will dissolve, put the solution and your circuit board in an airtight container, and adjust R2 so that the meter agrees with the value in Table 2.

One problem with the above calibration procedure should be obvious—how does one make the adjustments while the board is within the air-tight container? There are two possibilities. One is to make the adjustment outside the container, then place the board inside to see the result. Repeat as needed until the meter reading agrees with the value in Table 2. A more sensible solution would be to mount only the sensor in the container so that R2 can be adjusted from outside.

If those methods of calibration are impractical for you, you might try tuning in a local weather broadcast on radio or TV, or you could call the National Weather Service in your area. To do the final calibration, whatever standard you have chosen, apply power and then adjust R2 so that the value indicated by the meter agrees with your standard. Construction is now complete.

## Final thoughts

Whether or not you actually built our humidity monitor, we hope you learned something about what humidity is and about ways of measuring it. Like many subjects, there is a great deal more that could be said about humidity; we encourage you to do some investigating on your own. In a similar vein, our circuit was not intended to be used as the basis of a precision instrument, but we hope you'll find it fun to build as well as useful.

As you know, indoor humidity drops drastically in the winter. The reason is that cold, dry outside air is further dried by most indoor heating systems. (To be more accurate, hot air can hold more moisture than cool air, so the RH drops as the temperature rises. You may find it interesting to know that office buildings are often built these days with humidity controllers in addition to the systems that control their heating, ventilation, and air-conditioning (HVAC) systems.

You can use our humidity monitor to help maintain humidity levels at your home or office at a comfortable (and safe!) level. Humidity control can help prevent respiratory problems, and it can prolong the life of valuable paintings, books, and electronic devices.

For indoor use, avoid placing the humidity monitor near air-conditioning or heating vents; also, keep the monitor far away from any large potted plants since they can affect accuracy. For desktop use, keep the sensor away from a hot work-light, as heat can also affect the humidity reading.

An RH of less than 20% can easily occur during the winter. And with such low humidity, a large quantity of static electricity can build up, since the conductive moisture usually present in the air isn't available to provide a discharge path for that energy.

Making sparks fly by touching your spouse's nose or a metal surface may be fun, but doing that to your computer (or just about any electronic device) could prove fatal for the machine. Similarly, you're much more likely to damage CMOS and other components while building projects like our humidity monitor. So, an RH of about 50% is low enough for you to be comfortable, and high enough for your electronics to be safe. **R-E**

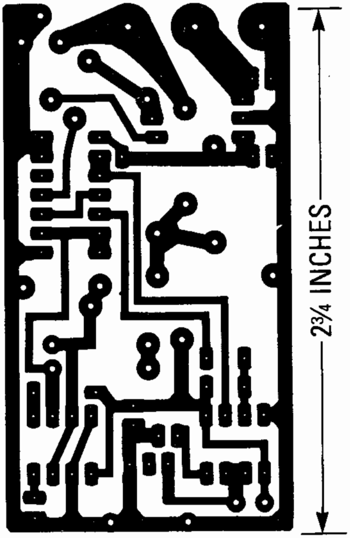

KEEP AN EYE on the humidity with our humidity monitor. The PC board for that project is shown here.