PROJECTS FOR RADIO CONTROL MODELLERS - 1

Here is the first of two articles in which the author introduces the basic concepts of modern digital proportional radio control systems, and then describes three handy projects for use with these systems: a relay driver circuit, a bidirectional speed controller and a servo signal source.

by PETER STUART, B.E., VK2BEU

Many radio control modellers use servos to operate switches, or to rotate rheostats to control electric motors, on their models. This is a cumbersome approach as it involves a double conversion of energy — from electrical to mechanical and back to electrical. It is also wasteful of electrical energy, because of the heat given off when a rheostat is used to achieve low motor speeds. Furthermore, any adjustment to suit different motors involves a rewind of the rheostat. The whole approach is also a waste of a good servo, which could be better employed for mechanical functions elsewhere in the model.

Servos are built for just one purpose: to provide mechanical movement from an electrical signal.

Armed with some knowledge about the characterisics of the electrical signal, it's not difficult to design circuits which can provide a direct conversion from the signal to any electrical function on the model, be it a switched or analog circuit.

In this article I will explain how a modern digital proportional radio control system operates, and then present circuits which can be built and connected to your R/C receiver to provide switched or variable control of electrical power.

I will assume you are using 'professional' radio control equipment, which is purchased as a separate item to your model and is fitted into the model by you. Cheaper equipment which is purchased already fitted to the model and which usually only provides switch-type control action is not compatible with the circuits presented here.

Digital proportional radio control was developed during the 1970's and no better proof of the soundness of the design can be given than to point out that the same principle is still in use today. Most R/C manufacturers use the same system, so equipment is mostly interchangeable between brands.

In simple terms, the system is designed to send up to eight channels of simultaneous control information from a transmitter to a receiver on the model, using a single radio frequency.

How it works

Fig.1 shows how it all works. An R/C (radio control) transmitter continually sends out a train of eight pulses, preceded by a synchronising pulse. Note that eight pulses are always present, even though a lesser number of channels may be fitted to the transmitter. Apart from the sync pulse which is of fixed duration (usually about 6ms), the length of the pulse of any particular channel can be varied between 1 and 2ms by the operator moving the corresponding control stick.

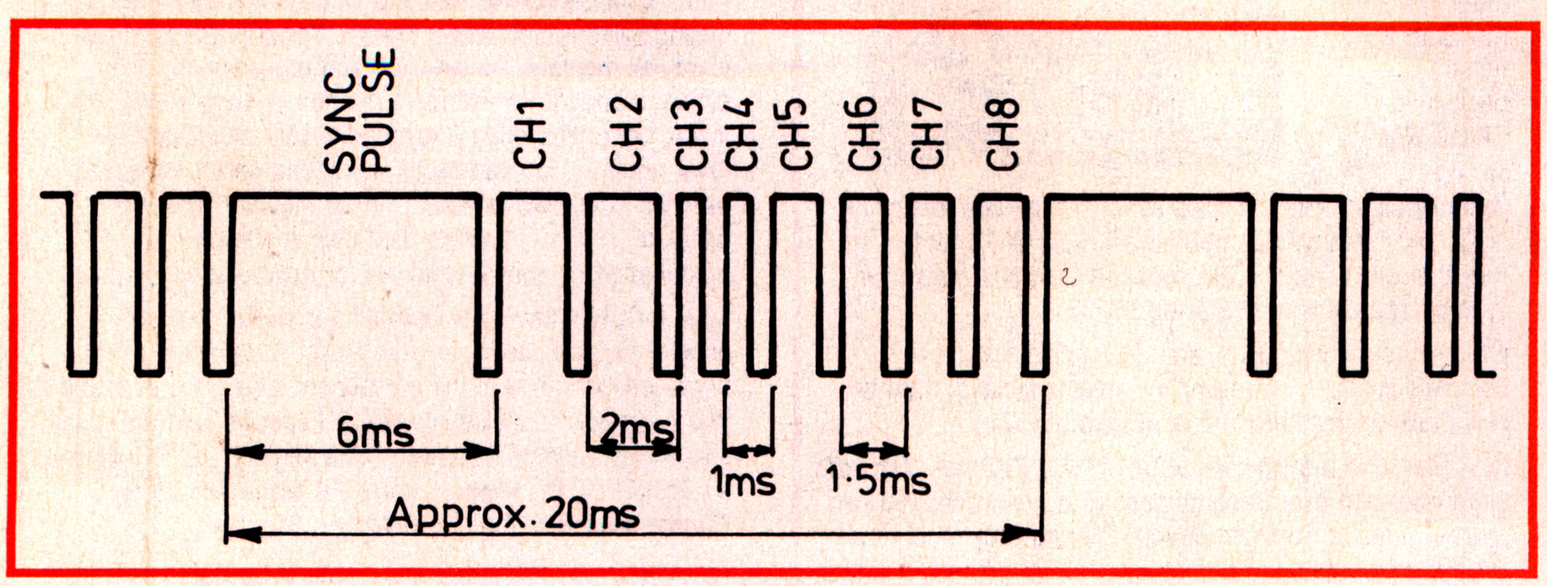

Fig.1: A typical radio control transmitted pulse train. Channels 1 and 2 are shown at 2ms duration, channels 3 and 4 are at 1ms, and channels 5 to 8 are at 1.5ms. The sync pulse is always 6ms long.

Inside the receiver, a counter is reset every time a sync pulse is received; then the counter starts counting the pulses from the pulse train. In this way both the transmitter and receiver keep in exact synchronism with each other. The counter allows the receiver to identify which pulse is currently being sent by the transmitter and send that pulse to the servo, or other device plugged into the corresponding channel ouput.

It takes approximately 18ms for a complete pulse train (or frame) to be transmitted; then it is repeated. The receiver outputs are therefore continually updated approximately 55 times per second.

Note the use of the word 'approximately'. The actual frame period can vary between 14ms and 22ms, depending upon whether all channels are set to their minimum or maximum settings. Most of the time, the control sticks are in their mid-position and the channel pulses are of 1.5ms duration, so the frame period is 18ms. For discussion purposes, this will be rounded off to 20ms.

Servos and other devices are therefore designed to respond to an input pulse of between 1ms and 2ms, repeated approximately every 20ms. The output shaft on a servo moves through an angle of 90°, starting from a fully anticlockwise position when a 1ms pulse is received and moving clockwise, with increasing pulse length, up to 90° at 2ms.

The servo will not move unless the pulse length changes; but when it does change, the servo will begin moving within 20ms. It will move to a new position within its 90° arc of travel, and the amount of rotation is proportional to the length of the input pulse in excess of 1ms. Because the motor draws current only when it is moving, servos are very economical of battery power.

Inside the servo, a timer is triggered on the leading edge of the signal pulse. The duration of the timer period is deter-

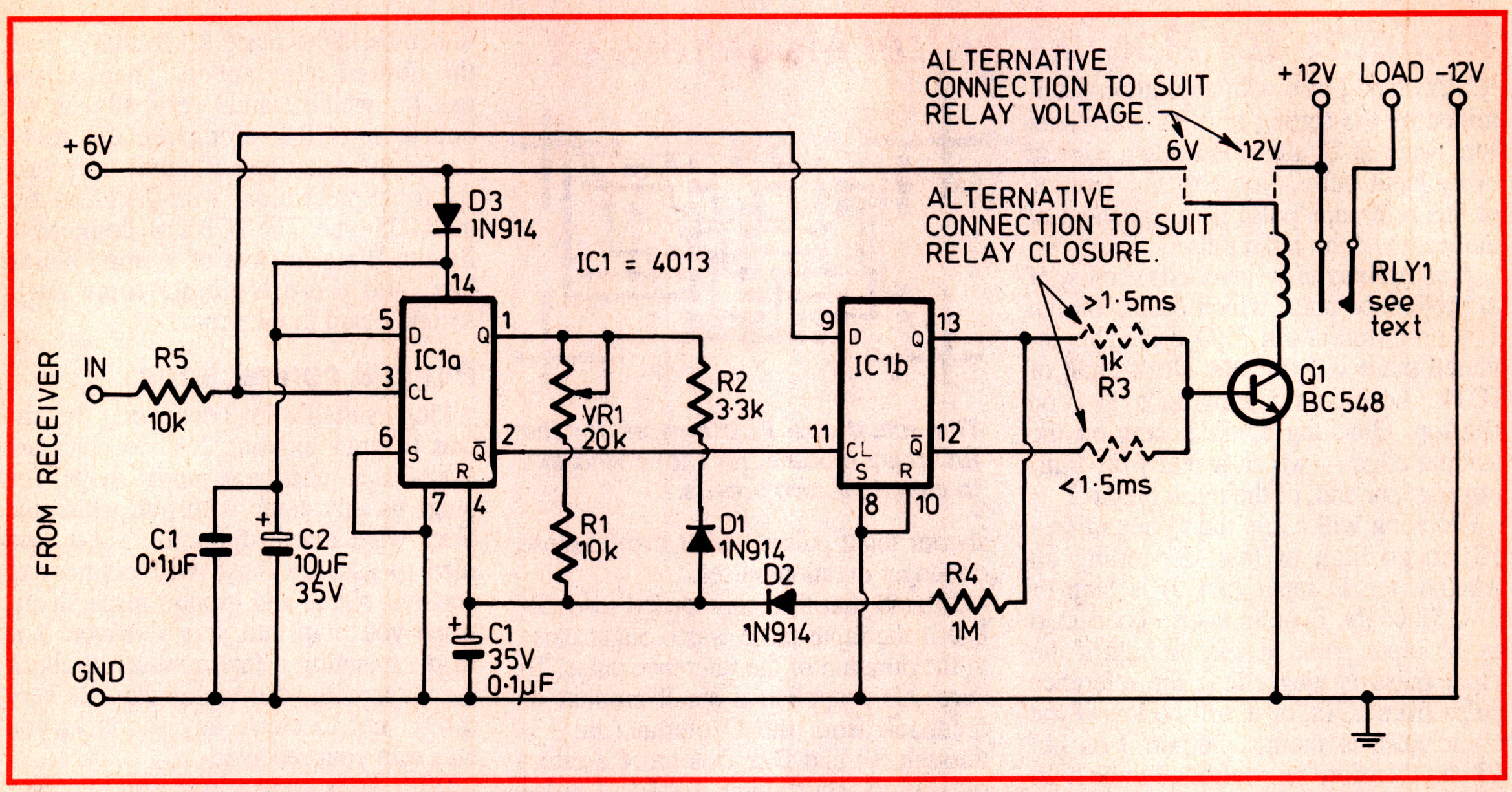

Fig.2: The circuit diagram for the radio control relay module. Note that altering the position of resistor R3 changes the relay function. The position of the wire link can be changed to suit the relay operating voltage.

mined by a pot fitted to the output shaft of the servo. Logic gates compare the duration of the signal pulse and the servo timer. If the servo is already stopped at the position required by the operator, then the pot timer period will exactly equal the signal pulse period and the servo motor will not move. However, if the operator moves the control stick to, say, increase the signal pulse length, then the logic circuits will detect the difference in time and briefly switch on the motor to rotate its output shaft clockwise.

20ms later, another signal pulse will arrive, but this time the differences in time of the two periods will be less, because the motor has rotated its output shaft pot a small amount and the servo timer period has increased. The motor will therefore be switched on for a briefer period.

This comparison will continue until the two periods are equal, at which time the motor will become stationary. If the operator moves the control stick in the other direction, the logic comparators will reverse the direction of the motor.

A great advantage of this system is that the duration of the motor switching pulses is proportional to the distance the motor must drive the servo. Thus, as the motor nears its required stopping position, the width of the pulses reduces and the motor slows proportionally. This eliminates overshoot and hunting.

A *disadvantage* is that the motor is fed with pulses at a frequency around 50Hz, which is a rather low for smooth motor running. But the end result is (surprisingly) satisfactory.

Semiconductor manufacturers have produced a number of IC's over the years designed to drive servos in the manner just described.

Some types are the NE544, SN76604 and ZN419. These contain a monostable, logic comparators and bidirectional motor drivers, all in one standard IC package.

Three circuits

Three circuits will now be described, each of which should be of interest to R/C modellers. The first two, an R/C Relay and a motor Speed Controller, are designed to plug directly into a standard R/C receiver to control circuits on the model. The third circuit is a Servo Signal Source which is a useful piece of test equipment for setting up the first two projects.

I would strongly recommend that constructors build and use the Signal Source when first powering up their new circuits, as the cost and effort involved in its construction is small compared to the risk of damage to your commercial gear. The Signal Source can also be used to test and set up servos in your model, and avoids having to fire up the transmitter and receiver whenever you wish to make a mechanical adjustment. This can be handy when others are operating models nearby and you really shouldn't be transmitting.

An R/C Relay

The circuit shown in Fig.2 is a single channel relay which can be operated from a 6V or 12V supply and which can switch currents up to one amp. It can be configured to energise the relay on a long pulse (greater than 1.5ms), or a short pulse (less than 1.5ms). The circuit uses both halves of a 4013 D-type flipflop to provide an edge triggered monostable (timer), and a D-type comparator to switch the relay.

The operation of the circuit is similar to a servo except that the monostable timer has a fixed period; it is not varied by an output shaft pot as in the case of a servo. The circuit works like this. A 1 - 2ms pulse from the receiver is fed through R5 which prevents any damage occurring to your R/C receiver should a short exist in your circuit. The signal is then applied to the clock input (pin 3) of IC1a, which is wired as a monostable.

Ignore for a moment that the input signal also goes to IC1b. Because the D input (pin 5) on IC1a is permanently held high, the leading edge of the newly arrived pulse will cause output Q (pin 1) to go high and thus commence charging C1 via R1 and VR1. The capacitor will charge until its voltage has exceeded half the supply voltage, at which time the reset pin (pin 4), to which the capacitor is connected, will be triggered into operation. The reset pin will internally drive Q (pin 1) low again, rapidly discharging the capacitor through D1 and

R2. A timed pulse with a duration determined by the setting of VR1 will therefore occur at Q, after the leading edge of every input pulse. Note that the duration of this reference pulse is independent of the length of the input pulse.

A complimentary (inverted) version of the reference pulse which occurs on pin 1 is produced at pin 2 (Q bar). This inverted pulse is fed to the clock input of IC1b, which is wired as a D-type flipflop. Clocking again occurs on the leading edge — which is really the trailing edge, or end, of the pulse on pin 1.

Clocking will cause the Q output (pin 13) to go high or low, depending on whether the D input (pin 9) is high or low. Since the D input is also connected to the input pulse, it will be high if the input pulse is longer than the reference pulse from IC1a, or it will be low if the input pulse is shorter. Output Q on pin 13 can therefore be controlled to be high or low, simply by lengthening or shortening the input pulse in relation to the reference pulse.

Output Q drives the relay via R3 and transistor Q1. An alternative connection can be made to give the opposite action on the relay. Connecting R3 to the Q-bar output will cause the relay to close on shorter input pulses, rather than to close on longer duration pulses.

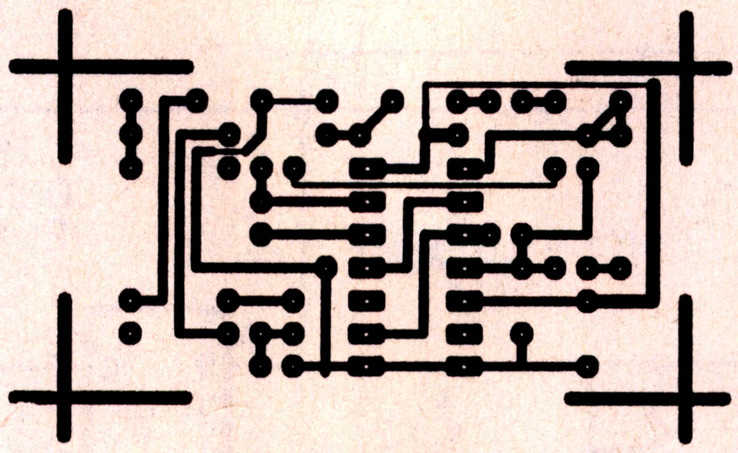

The actual size PCB artwork for the R/C relay module, for those who like to etch their own boards.

I found that the relay tended to oscillate if the input pulse was brought close to the duration of the reference pulse. To cure this I applied a small amount of feedback from the Q output (pin 13) through R4 and D2. This has the effect of slightly shortening the fixed pulse when Q is high, increasing the time gap between the two pulses, and ensuring the relay is held on. The fixed pulse will resume its normal period only when a short input pulse is received, and pin 13 goes low.

As presented, the circuit behaves as an SPST switch. It is possible to build two circuits, and by changing the connection of R3 on one, to arrange for one relay to close on increasing pulse length, and the other to close on a decreasing pulse. With suitable adjustment of the VR1 trimpots, a distinct centre-off position of the control stick can be arranged, to provide an SPDT switch action. This is handy for bidirectional control of fixed speed motors, or to provide two switch actions from one channel — although only one relay can be energised at a time, of course.

Construction should start by inserting the voltage selector link in its correct position to match the intended relay supply voltage to its coil. Next insert the PCB pins and minor components, remembering to place R3 so that it gives the desired relay action. There is one resistor which stands vertically on the board: it is R4, alongside the relay. Leave the relay and IC until last. Take the usual precautions with the IC as it is a CMOS type. The PCB was designed to fit into the side slots of a small plastic box, and there is ample room for a second board in the same box.

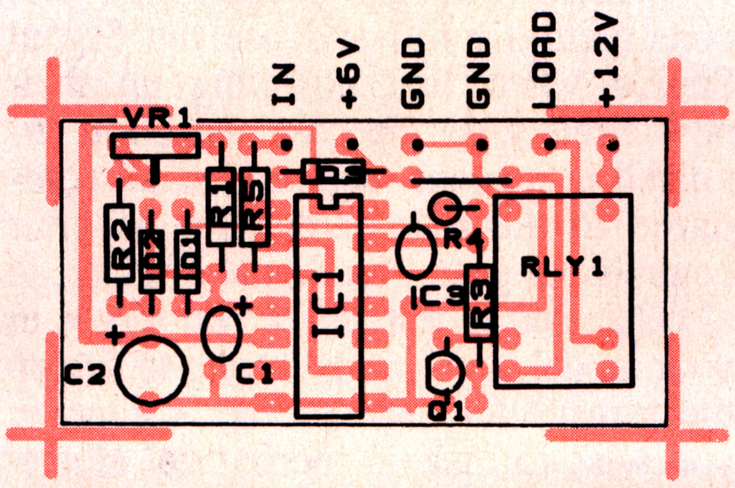

And here is the component overlay for the R/C relay board. Note that resistor R4 is mounted vertically.

Plugs & connections

Plugs suitable for connecting the circuit to your existing R/C receiver are available at most large model shops. The plugs usually come with red, white and black wires attached, but it is not a good idea to assume these will connect to positive, signal and ground respectively, when you plug into your receiver. It is worth spending a few minutes to check the wires with your multimeter. Be very careful not to create any shorts as you may ruin your receiver!

With your transmitter and receiver both operating, you should measure +/- 6V on the red and black wires and about 0.45 volts on the white and black wires. If you have someone helping you, they can move the control stick on the transmitter. If they move the stick corresponding to the channel you are monitoring, the 0.45V reading should rise and fall by about 0.15V. Write down the wire colours and functions for future reference, then correctly wire the plug to your relay board.

At this point the relay is ready to be tested, but I do not recommend that you test it using your R/C receiver. It is safer to build and use the Servo Signal Source which is described in the second of these articles. Adjust VR1 on the relay board to its mid position, then plug the relay board into the Signal Source and apply an external 6V or 12V battery as required, to power the relay. Movement of the control pot should result in relay action at some point over the range.

VR1 can be used to adjust the operating point of the relay to the desired position. Note that the incorporation of feedback in the circuit means some hysteresis is present, so the relay will not switch at the same point on increasing and decreasing stick movement.

The board is now ready to be fitted in its box. File a small notch in the top edge of the box to permit the signal cable to emerge when the lid is fitted. Tie a knot, or fit a cable tie to anchor the cable.

In the second of these articles, I'll describe a Speed Controller circuit and a handy Servo Signal Source.

(To be continued) ❖

JPS COMMUNICATIONS INC.
THE LEADER IN NOISE AND INTERFERENCE REDUCTION

NF-60 DSP NOTCH FILTER
NIR-10 DSP NOISE/INTERFERENCE REDUCTION UNIT
NRF-7 DSP NOISE REMOVER/FILTER UNIT
NTR-1 DSP WIDE BAND NOISE/TONE REMOVER
SSTV-1 DSP FILTER FOR SLOW SCAN TV

For data sheets and pricing contact
ZRV ELECTRONICS PTY LTD
Unit 10/29 Peel Street,
ELTHAM VIC. 3095
Tel: (03) 439 3389 Fax: (03) 439 2483

KEVIN CAVANAGH VK4SP
222 Brisbane Valley Highway,
WANORA IPSWICH QLD. 4306
Tel/Fax: (074) 64 3954

Agents for R L DRAKE Communication Receivers

READER INFO NO. 24