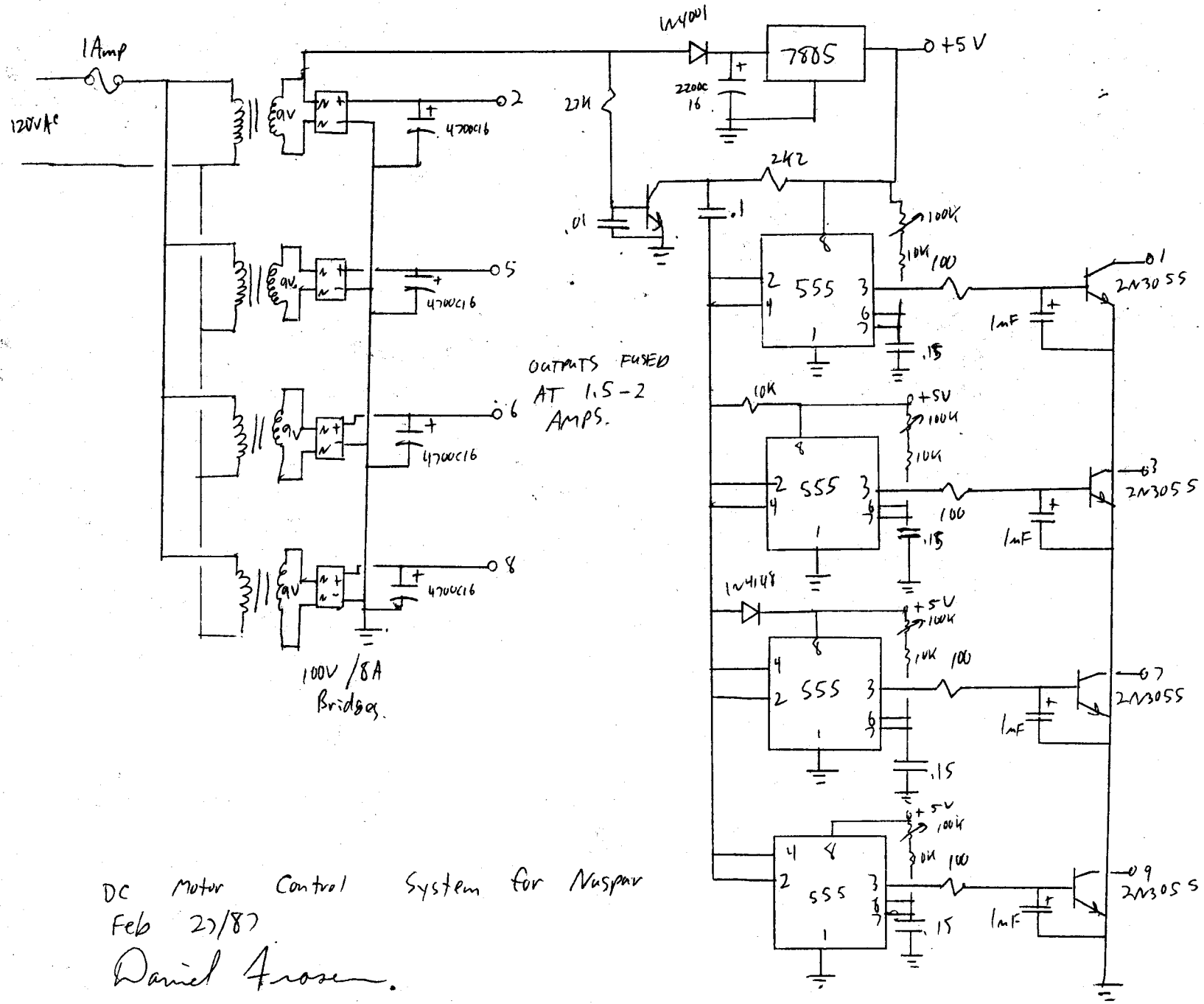

DC Motor Control System for Nuspar
Feb 27/87
Daniel Frosen.
Vancouver, BC.