Surface acoustic wave devices — fundamentals and applications

The basic physics of SAW devices was examined in part 1. In this article a major application of time coded SAW filters, spectrum analysis, is explained.

P. J. Hall
Physics Department, University of Tasmania

Part 2

THE THIRD MAJOR use of time-coded SAW filters is in spectrum analysis and, as in chirp radars, the basic component is the dispersive delay line (Figure 10).

Before examining SAW spectrum analysis methods, it is useful to consider alternative techniques and their limitations. This section is mainly concerned with analysis systems designed for on-line signal processing applications. In such applications, spectrum analysis is used to obtain information about signals on a real-time 'as the action happens' basis, perhaps in order to control some other process e.g: the electrical steering of an antenna array to minimise interference to a radio link.

The most obvious way of analysing a given bandwidth is to assemble a bank of frequency contiguous filters covering the analysis bandwidth and to relate the output of each filter to the spectral energy falling within the passband of that filter. Filterbanks are commonly used in audio, radio astronomy and some military applications with refinements dependent upon the specific use.

Unfortunately, when a large bandwidth is to be analysed with good frequency resolution, the number of filters becomes prohibitively great and the analyser becomes large, expensive, difficult to align, and difficult to keep in alignment. Filterbanks consisting of SAW bandpass filters are now available and offer an excellent alternative to LC filters in some RF applications, although in most situations the more elegant SAW techniques to be described would normally be used.

Spectrum analysis

Conventional scanning spectrum analysers are acceptable for laboratory use but are too slow and too wasteful of signal energy to be used in most signal processing roles. A signal shorter than the time the analyser takes to scan the analysis bandwidth can come and go without ever registering on the instrument.

In military jargon, the analyser has a very low probability of intercept (POI). If the scan rate is increased to raise the POI, the available frequency resolution is decreased. The scanning analyser wastes energy because if 'N' frequency resolution cells are resolved across the analysis bandwidth, the time spent actually looking at each cell is only 1/Nth of the total observing time.

Digital spectrum analysers based on the Fast Fourier transform (FFT) algorithm are

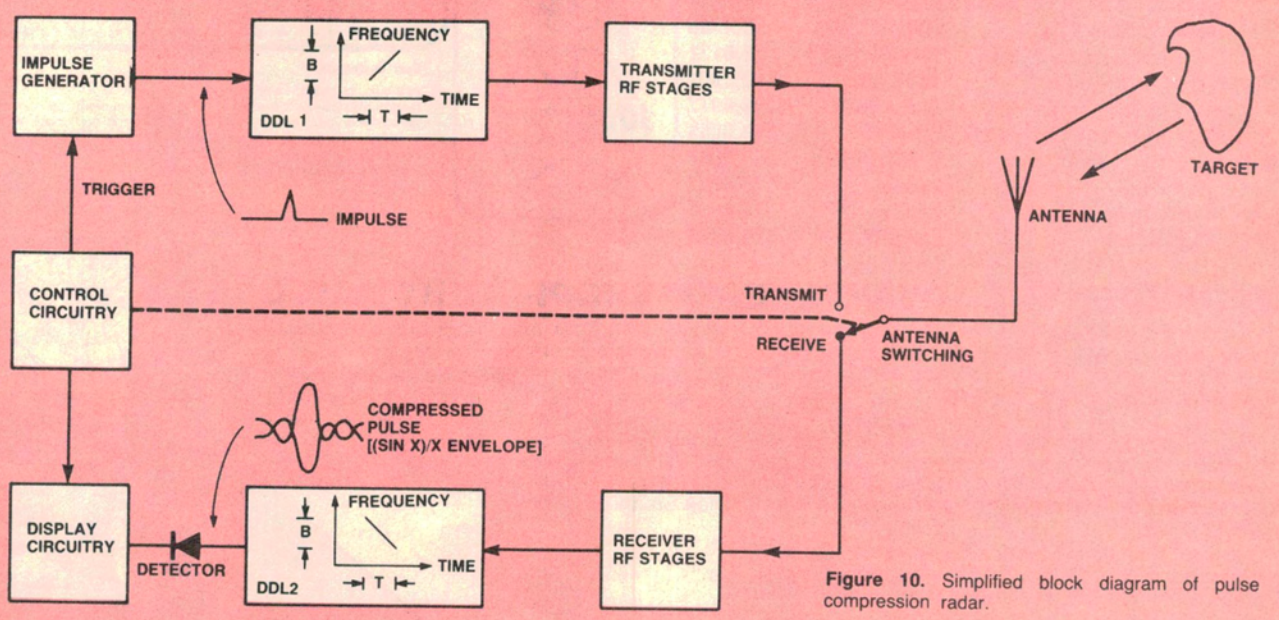

Figure 10. Simplified block diagram of pulse compression radar.

now familiar in audio test and development laboratories as well as in some signal processing applications. FFT methods produce accurate spectra and are capable of conveniently providing a true Fourier transform i.e: phase as well as amplitude, or power of spectral components. Unfortunately, the analysis bandwidth for real-time FFT processors is currently rather limited with most commercial units being essentially audio analysers.

A second digital method of power spectrum analysis, the auto-correlation technique, can be extended to wide bandwidths but is not suitable as a general approach, particularly in applications where high time resolution i.e: large number of spectra per second is needed.

Another instrument sometimes used for spectrum analysis in radio astronomy and military applications is known as the acousto-optical spectrum analyser. This device relies on the interaction of laser light with RF sound waves in a translucent piezoelectric crystal. Wide bandwidths can be analysed with good frequency and time resolution but current designs are plagued with a number of practical problems, the most serious being mechanical and thermal instability and limited dynamic range.

Coherent (phase sensitive) acousto-optical processors have been described but with existing technology, practical problems in such systems are acute. Integrated acousto-optical processors which utilise the interaction of light from a solid state laser with surface acoustic waves may substantially avoid the problems of existing optical analysers.

SAW dispersive delay line spectrum analysers overcome many of the disadvantages of the other types of instruments and offer a state-of-the-art solution to the problem of real-time, wideband Fourier analysis.

Compressive receiver

A block diagram of a SAW 'compressive receiver' spectrum analyser is shown in Figure 11. This configuration, which is only one of several possible arrangements, uses two SAW dispersive delay lines (DDLs) similar to the type used in the chirp radar system described earlier.

One DDL is used to expand an impulse into a chirp, and this chirp is then mixed with signals in the band to be analysed. Consider CW input signals for simplicity. Each signal produces a chirp from the mixer which is time co-incident with, but offset in frequency from the other chirps. This is illustrated in the frequency-time diagram for the process (Figure 12).

Signals spaced in frequency at the input produce chirps which enter the passband of the second DDL, the convolver, at different times. The chirp slope of the convolver is the exact inverse of the expander DDL chirp slope so chirps entering the convolver emerge as compressed pulses, just as in the pulse compression radar. In this case however, chirps due to different input frequencies enter the convolver at different times, so the compressed output pulses are separated in time.

Hence, separation in frequency at the compressive receiver input produces separation in time at the output, so the instrument functions as a spectrum analyser. The time axis on a display device e.g: an oscilloscope can be read as frequency by using the convolver chirp slope as a scaling factor, i.e: $f = (B/T)t$. This process is an example of the 'chirp transform' and, as mentioned earlier, other practical implementations are possible.

Several key characteristics of the compressive receiver are related to the time-bandwidth product, $N = BT$, of the convolver. As expected, the width in time of the compressed pulses is of the order of the reciprocal bandwidth, $1/B$. The receiver takes T seconds to analyse the total bandwidth, B. The number of identifiable frequency resolution cells is therefore about $T/(1/B)$ or N, so the time-bandwidth product is analogous to the number of channels in a filterbank or the number of points in a digital FFT analyser. The equivalent width in frequency is simply B/N or I/T.

It can be shown that if a compressive receiver is designed to give a frequency resolution equivalent to a scanning spectrum analyser, the compressive receiver can analyse the input bandwidth a factor of N faster than the scanning analyser. Since N can be up to 20 000 with currently available SAW devices, the advantage can be very large. As shown in Figure 12, it is usual to use an expander chirp with twice the bandwidth and duration of the convolver impulse response.

This ensures that chirps due to signals at either edge of the analysis bandwidth emerge from the convolver fully compressed, but it also means that chirps due to some very short duration input signals can fall outside the convolver bandwidth for part of the active cycle of the receiver. ▶

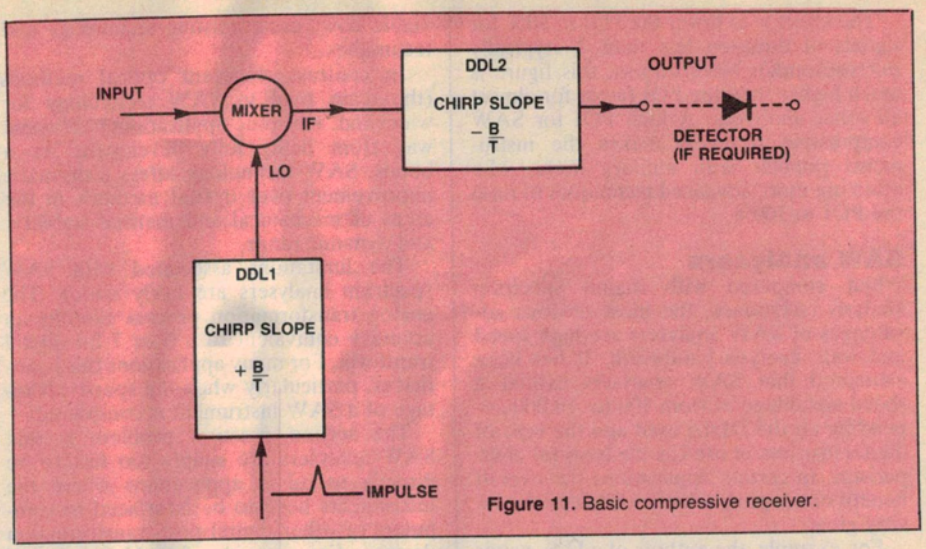

Figure 11. Basic compressive receiver.

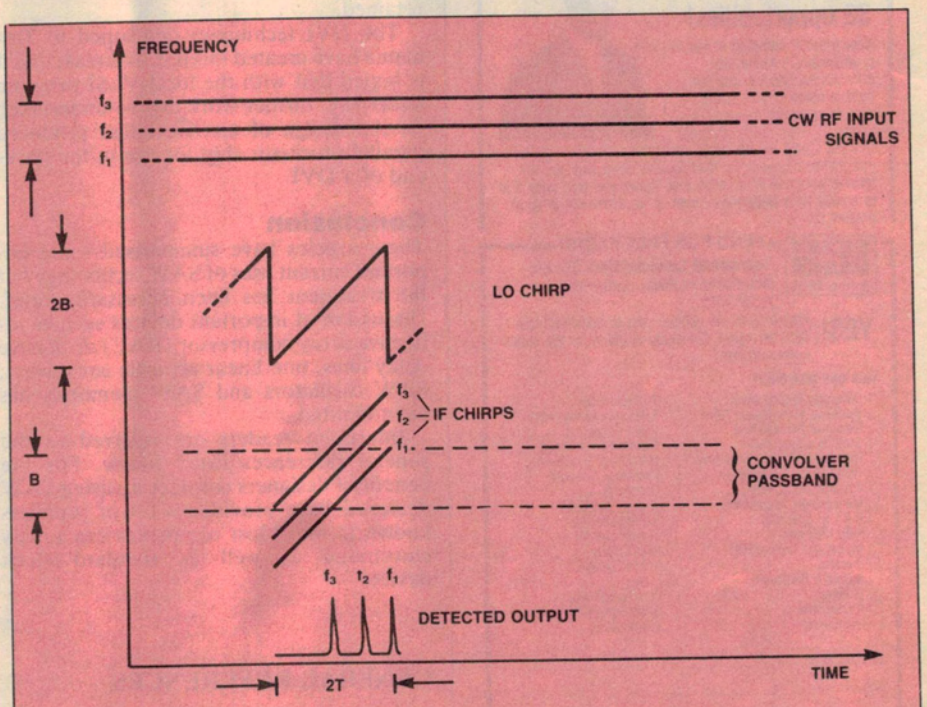

Figure 12. Frequency-Time diagram for compressive receiver. Note the duality between frequency at the input and time at the output.

The effect is to lower the POI to 50% for signals of duration less than T (typically microseconds). Nevertheless, this figure is much higher than the POI factor for almost all other analysers. A high POI for SAW compressive receivers makes the instruments popular with military users, who often use more advanced techniques to raise the POI to 100%.

SAW analysers

When compared with digital spectrum analysis techniques, the most obvious advantages of SAW analysers are high speed and wide analysis bandwidth. It has been estimated that SAW analysers exhibit a speed advantage of from 100 to 10 000 depending on the DDLs used and the type of digital instrument used as the basis for comparison. In certain applications the overall benefit of adopting SAW technology can be very great.

For example, the authors of a U.S. paper describing a sophisticated SAW signal processing module claim an advantage factor for SAW technology over digital methods of 12 000. This figure is based on a system figure of merit defined as 'the equivalent number of complex multiples per second per dollar of development cost'.

SAW processors are similar to digital instruments in that both are capable of providing amplitude and phase spectra and, as such, are useful in roles requiring coherent signal processing. Part of the recent work in radio astronomy at the University of Tasmania has been to demonstrate that coherent SAW spectrum analysers are viable now, using existing technology and techniques.

In contrast, coherent optical methods (the main rival to SAW technology for wideband, real-time applications) are some way from being fully developed. As a bonus, SAW technology offers a dramatic improvement over optical methods in the areas of mechanical and thermal stability, and dynamic range.

The limitations associated with SAW spectrum analysers are fairly minor. The analog transformation process exhibits an accuracy equivalent to a 6 or 7 bit digital transform. For many applications this is sufficient, particularly when the speed advantage of a SAW instrument is considered.

The second practical problem is that SAW analysers are simply too fast to be directly useful in applications where the instruments need to be interfaced to computers or other digital post-transformation devices. For example, two University of Tasmania spectrum analysers output data at a rate of around 40 ns per frequency resolution cell, and this is the rate at which a digital processor needs to sample the detected output.

We have solved the problem by producing 'digital video integrators', or DVIs, to act as an interface between the SAW analysers and slower logic. A DVI samples the analyser output at high speed and adds together many spectra before the integrated spectrum is output to a computer or other device. The DVI runs continously so there is no loss of new data while the integrated spectrum is output.

This process degrades the time resolution slightly but, even so, the integrated spectrum time resolution can approach 100 μs with existing data acquisition computers. Of course, the wide-band, coherent processing capability of SAW spectrum analysers is retained.

The DVI techniques developed in Tasmania have created interest overseas, and it is hoped that with the local VLSI program underway, further work can be undertaken on the design of an Australian produced parallel processor ship for use in the back-end of a DVI.

Conclusion

These articles have summarised some important current uses of SAW technology but the treatment has been necessarily brief. Discussion of important devices such as reflective array compressor (RAC) dispersive delay lines, non-linear acoustic convolvers, SAW oscillators and SAW memories has been omitted.

Interested readers are referred to the general references listed below. For the benefit of designers considering using SAW devices I have provided a list of suppliers known to me. Most companies can supply customised as well as standard stock devices.

GENERAL REFERENCES

1. Butler, M.B.N., 'Surface acoustic wave devices', *Electronic Engineering*, June 1980, July 1980, February 1981.
2. Dieulesaint, E. and Royer, D., *'Elastic waves in solids'*, Wiley, 1980.
3. Hartmann, C.IS. et al., 'SAW devices for military, communications, radar and EW systems', *Microwave Journal*, July 1982.
4. Oliner, A.A. (Ed.), *'Acoustic surface waves'*, Springer-Verlag, 1978.
5. Penimuri, D. and Havens, D.P., 'Surface acoustic wave filters prove versatile in VHF applications', *Electronics*, July 5, 1979.

SAW DEVICE SUPPLIERS

1. Andersen Laboratories Inc., 1280 Blue Hills Avenue, CT 06002, USA. TWX 710-425-2390.
2. Crystal Technology Inc., 1035M E. Meadow Cir., Palo Alto, CA 94303, USA.
3. GEC — Marconi Research Centre, Great Baddow, Essex, CM2 8HN, U.D. Telex 99201.
4. Hughes Aircraft Company, Gound Systems Group, P.O. Box 3310, Fullerton, CA 92634, USA.
5. Racal-MESL Ltd., Lochend Industrial Estate, Newbridge, Midlothian, EH28 8LP, U.K. Telex 72384.
6. RF Monolithics Inc., 4441 Sigma Road, Dallas, Texas 75234, USA.
7. Siemens Ltd., Australian Office, 544 Church Street, Richmond, Victoria, 3121. Telex AA30425.
8. Signal Technology Ltd., Cheney Manor, Swindon, Wiltshire, SN2 2PJ, U.K. Telex 444410.
9. Thomson-CSF, Chemin des Travails, B.P. 53, 06802 Cagnes-Sur-Mer, France. Telex 204.780F. ●

Train at home for a better career

Choose from 32 opportunities!

Now without attending school or university, without any previous experience, you can train at home in your spare time for a money making career ... even obtain a Career Diploma. Send for free facts about the exciting programme that interests you most. Mail coupon today and you will receive complete information that shows you how easy it is to qualify for a great new career or advancement in your present job.

ICS Since 1890 — SEND FOR FREE FACTS!
International Correspondence Schools
400 Pacific Highway, Crows Nest
NSW 2065

YES! Please send me without cost or obligation free facts on how I can study at home for the career I have chosen.

TICK ONE BOX ONLY!

- ☐ Computer Programming
- ☐ Business Management (IBA)
- ☐ Executive Management
- ☐ Small Business Owner
- ☐ Refrigeration/Air Conditioning
- ☐ Hotel/Motel Management
- ☐ Practical Accounting
- ☐ Management Accounting
- ☐ A.C.I.S. Coaching
- ☐ Auto Mechanic
- ☐ Motorcycle Maintenance
- ☐ Building
- ☐ Builder's Draftsman
- ☐ Drafting
- ☐ Architecture
- ☐ Electronics
- ☐ TV Technician
- ☐ Sales/Marketing (AMI)
- ☐ Civil Engineering
- ☐ Electrical Engineering
- ☐ Mechanical Engineering
- ☐ Pharmacy Assistant
- ☐ Secretarial
- ☐ English Language
- ☐ Recreational Art
- ☐ Commercial Art
- ☐ Photography
- ☐ Interior Design
- ☐ Guitar
- ☐ Commercial Writing
- ☐ Short Story Writing
- ☐ Dressmaking

001

Mr/Mrs/Miss _____

Address _____

_____ P/code _____ Phone (Home) _____

Tick Here if Full Time Student ☐

0682

Ian J. Truscotts

ELECTRONICS WORLD

For all your Electronic needs

- KITS
- COMPONENTS
- TOOLS ETC.

Resellers of Dick Smith Alltronics

Call in and browse around

Cnr. Bayswater & Eastfield South Croydon

Phone 723 3860