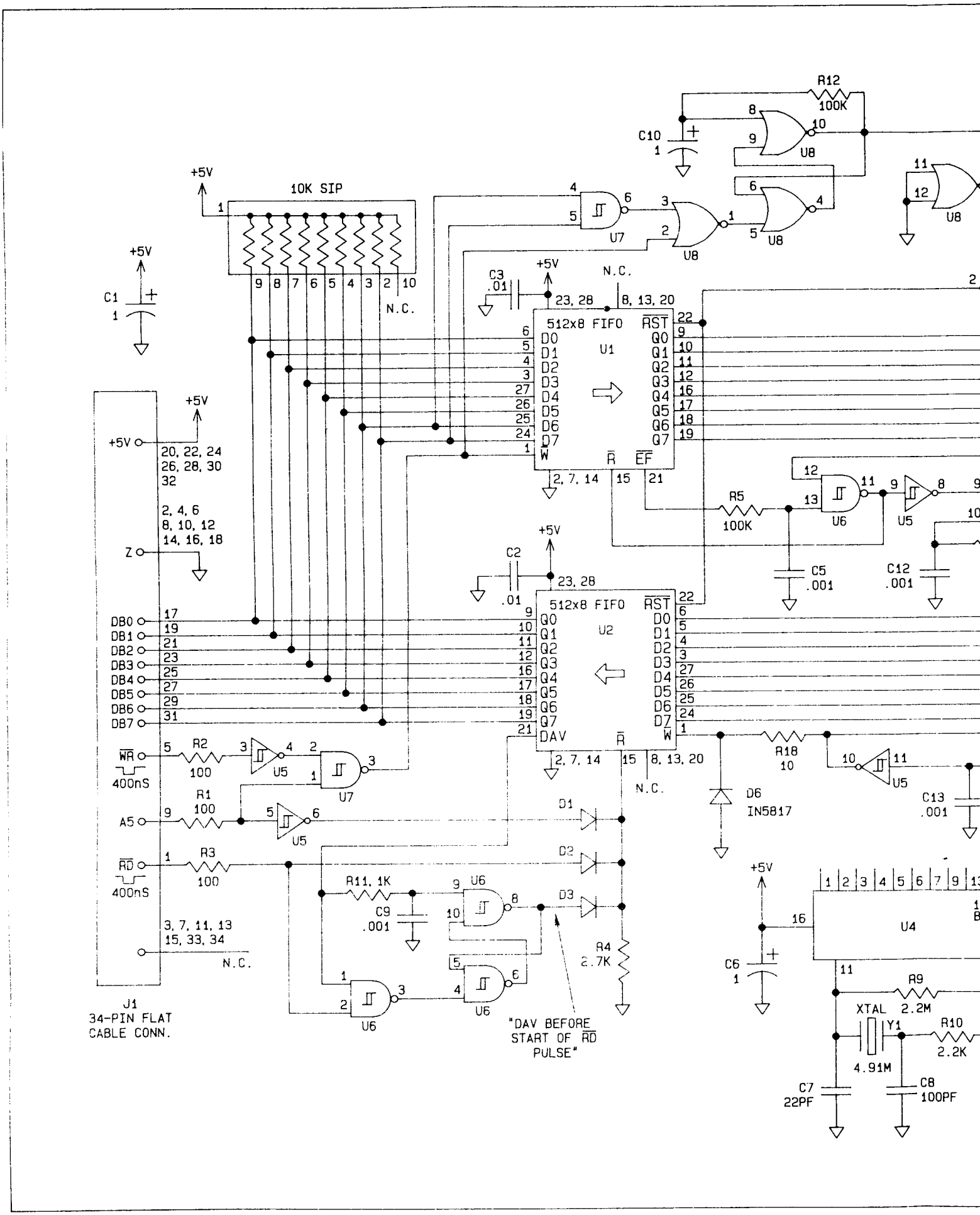
R12
100K
C10
1
U8
+5V
10K SIP
N.C.
C1
1
U7
C3
.01
512x8 FIFO
U1
RST
Q0
Q1
Q2
Q3
Q4
Q5
Q6
Q7
D0
D1
D2
D3
D4
D5
D6
D7
W
R
EF
23, 28
8, 13, 20
2, 7, 14
R5
100K
U6
U5
C5
.001
C12
.001
C2
.01
512x8 FIFO
U2
DAV
R18
10
D6
IN5817
C13
.001
20, 22, 24
26, 28, 30
32
2, 4, 6
8, 10, 12
14, 16, 18
Z
DB0
DB1
DB2
DB3
DB4
DB5
DB6
DB7
WR
400nS
R2
100
R1
100
A5
RD
R3
100
3, 7, 11, 13
15, 33, 34
J1
34-PIN FLAT
CABLE CONN.
R11, 1K
C9
.001
D1
D2
D3
R4
2.7K
"DAV BEFORE
START OF RD
PULSE"
U4
C6
1
R9
2.2M
XTAL
Y1
4.91M
R10
2.2K
C7
22PF
C8
100PF

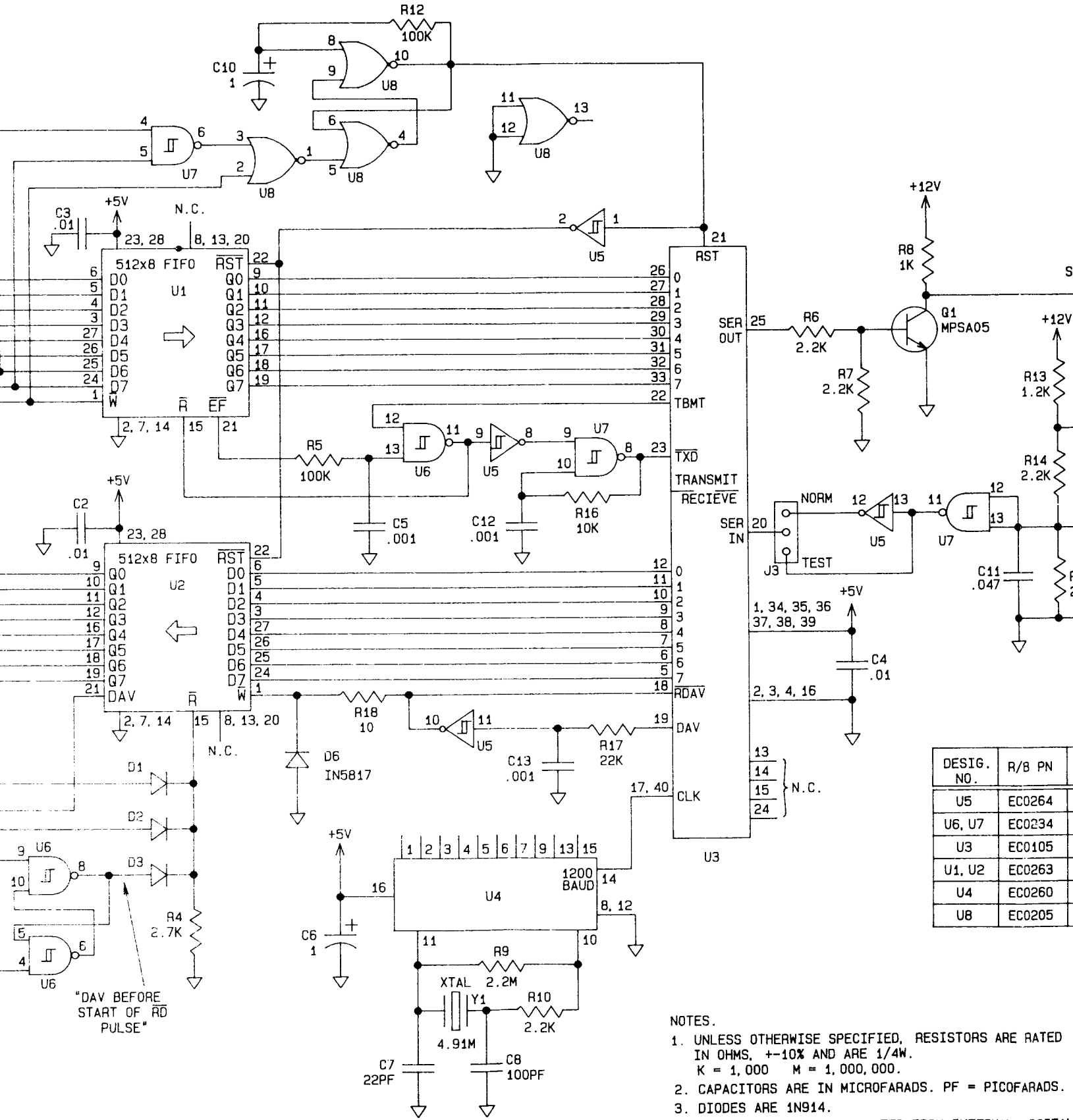

DESIG. NO.	R/B PN
U5	EC0264
U6, U7	EC0234
U3	EC0105
U1, U2	EC0263
U4	EC0260
U8	EC0205

NOTES.

1. UNLESS OTHERWISE SPECIFIED, RESISTORS ARE RATED IN OHMS, +-10% AND ARE 1/4W.
   K = 1,000 M = 1,000,000.
2. CAPACITORS ARE IN MICROFARADS. PF = PICOFARADS.
3. DIODES ARE 1N914.
4. Z AND G TERMINALS ISOLATED FROM INTERNAL DIGITAL

DWG NO.	KC1551	E
ISSUE	CHANGE	
A	ADDED R17 & R18 SAM 2-18-88	
B	ADDED NOTE 4; C7 WAS 30PF, C8 WAS 82PF. I.A. 3-3-88	
C	MOVED D4 AND D5 FROM CS LINE, D4 WAS TO +12V. AAS 3-10-88	
D	Q1 WAS MPS6515. PCR3990. 09-29-88 JP	
E	ADDED D6 & C13 C.W. 5-12-89	

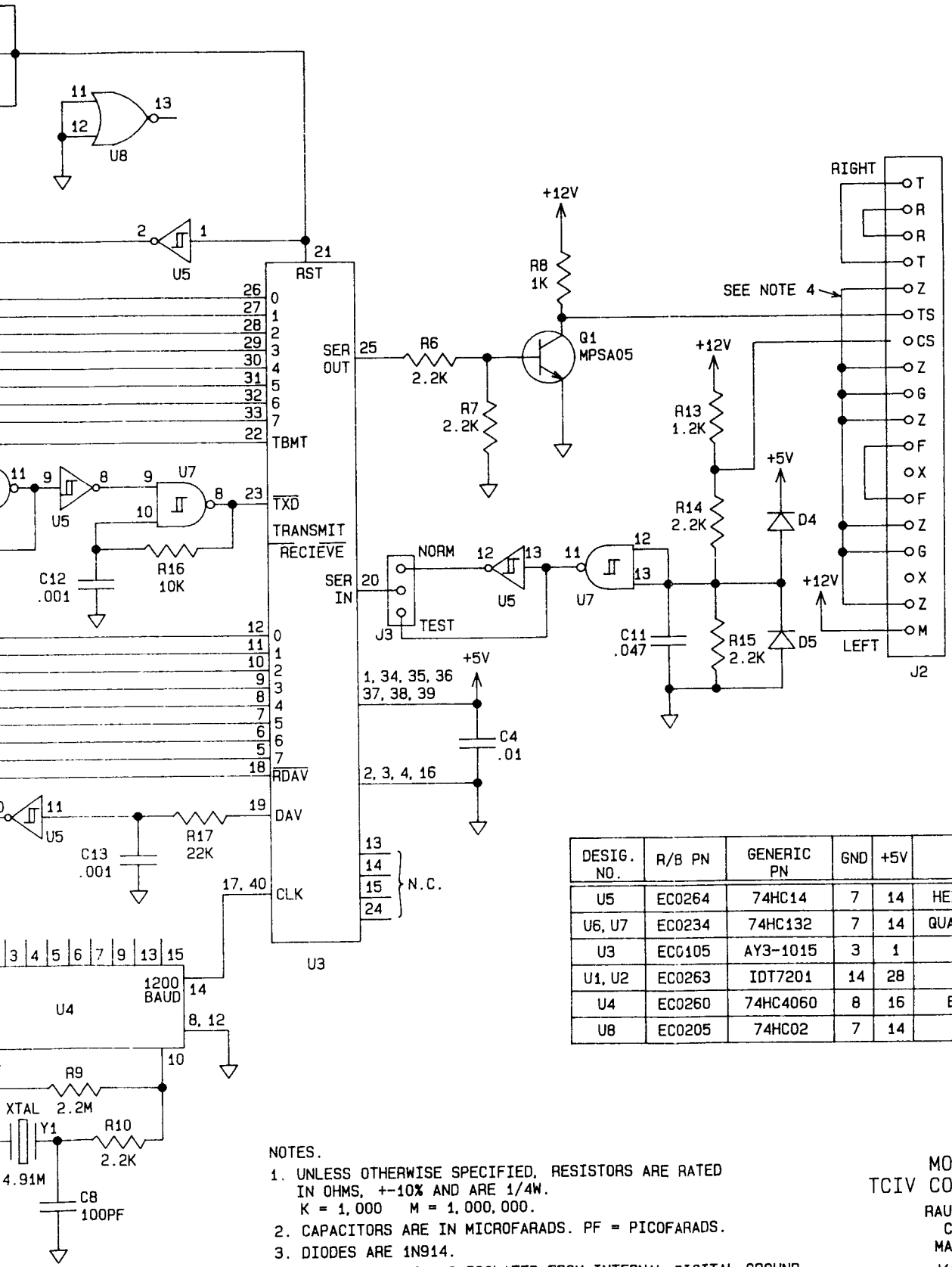

DESIG. NO.	R/B PN	GENERIC PN	GND	+5V	FUNCTION
U5	EC0264	74HC14	7	14	HEX SCHMIDT INV
U6, U7	EC0234	74HC132	7	14	QUAD SCHMIDT NAND
U3	EC0105	AY3-1015	3	1	UART
U1, U2	EC0263	IDT7201	14	28	FIFO
U4	EC0260	74HC4060	8	16	BIN COUNTER
U8	EC0205	74HC02	7	14	QUAD NOR

NOTES.

1. UNLESS OTHERWISE SPECIFIED, RESISTORS ARE RATED IN OHMS, +-10% AND ARE 1/4W.
   K = 1,000 M = 1,000,000.
2. CAPACITORS ARE IN MICROFARADS. PF = PICOFARADS.
3. DIODES ARE 1N914.
4. Z AND G TERMINALS ISOLATED FROM INTERNAL DIGITAL GROUND.

MODEL TC4420
TCIV CONSOLE INTERFACE

RAULAND-BORG CORP.
CHICAGO, IL.
MADE IN U.S.A.

KC1551 - E