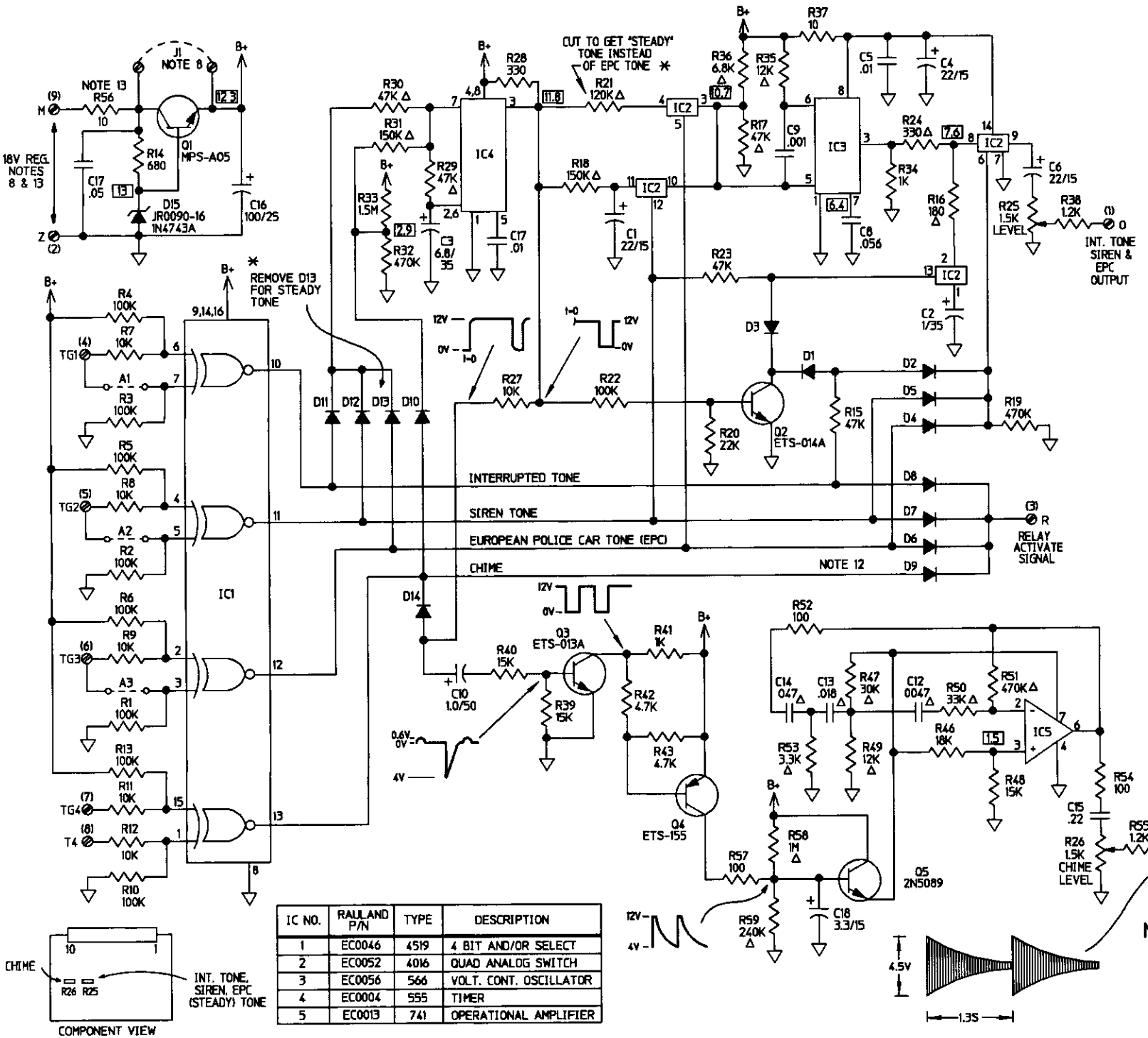

IC NO.	RAULAND P/N	TYPE	DESCRIPTION
1	EC0046	4519	4 BIT AND/OR SELECT
2	EC0052	4016	QUAD ANALOG SWITCH
3	EC0056	566	VOLT. CONT. OSCILLATOR
4	EC0004	555	TIMER
5	EC0013	741	OPERATIONAL AMPLIFIER