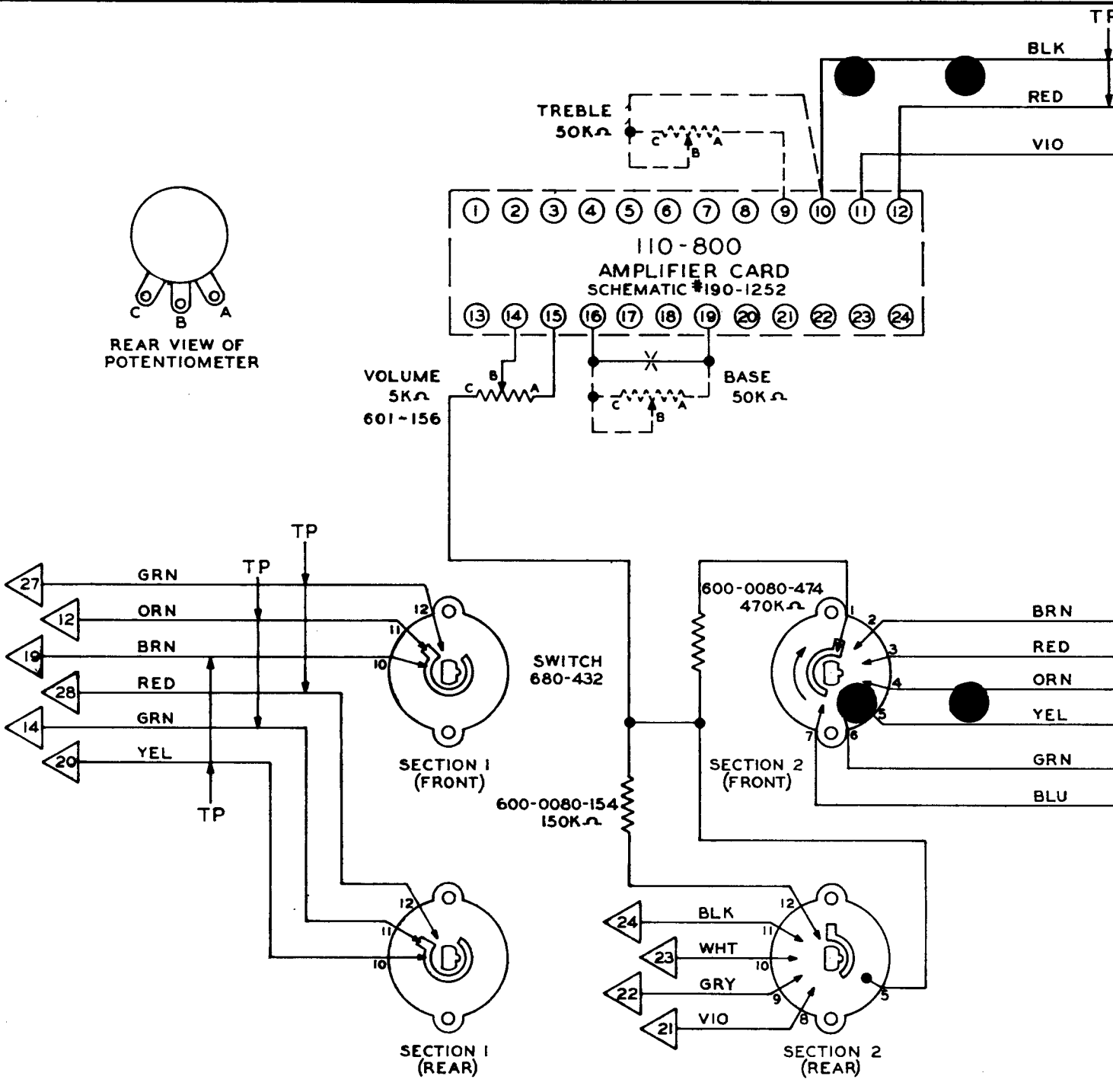

COMMUNICATIONS SYSTEMS SERVICE MANUAL

UNLESS OTHERWISE SPECIFIED DECI
DuKAN
Corporation
ESTABLISHED 1922
ST. CHARLES, ILLINOIS U.S

19A105

190-1256	
NO. REQ'D.	USED ON

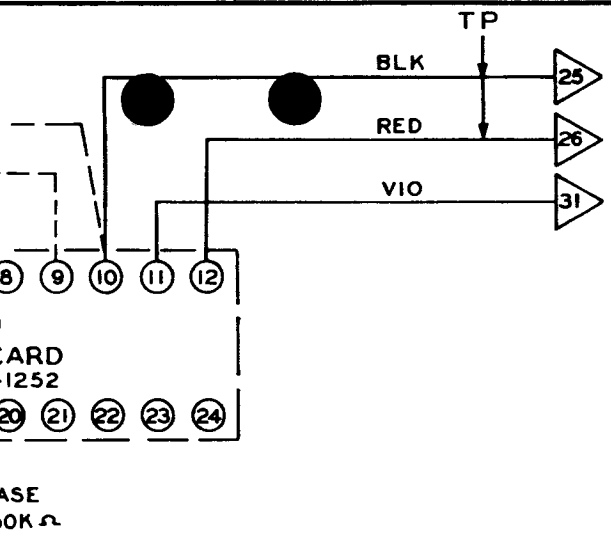

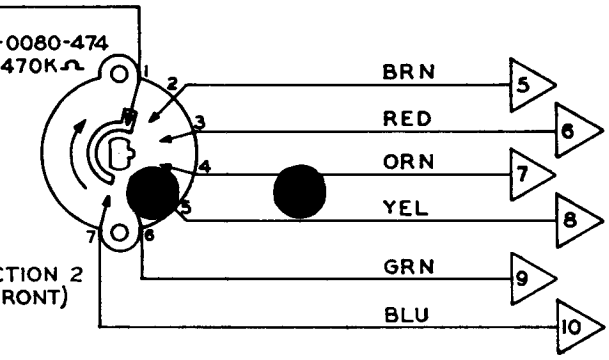

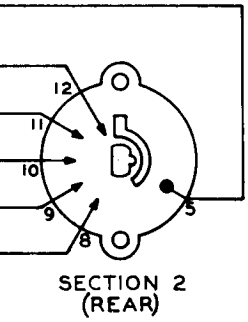

NOTES:

1. ●—X—● DENOTES: CUT WHEN OPTIONAL TONE CONTROLS (DOTTED LINES) ARE USED.
2. ▷N CONNECT TO LIKE POINTS ON 1A760 CIRCUITRY.
3. ROTARY SWITCH SHOWN IN "OFF" POSITION AND VIEWED FROM KNOB END.
4. TP DENOTES TWISTED PAIRS.

ISSUE	WAS	DATE	APPR.
02	▷ "25" FLAG WAS CONNECTED TO TERM. 15	4-18-67	
01	▷ "26" FLAG WAS CONNECTED TO TERM. 8	3-9-66	

MAT'L FINISH

UNLESS OTHERWISE SPECIFIED DECIMAL DIMENSIONS TO BE ±. FRACTIONAL DIMENSIONS TO BE ± ANGLES TO BE ±

DuKane Corporation
ESTABLISHED 1922
ST. CHARLES, ILLINOIS U.S.A.

SCHEMATIC DIAGRAM
MODEL 19A105
I.C. PROGRAM ADAPTER KIT

SCALE — DATE 5-21-64
DRAWN APP'D. CHECKED ENGR.
NO. 190-1256 — ISSUE 02