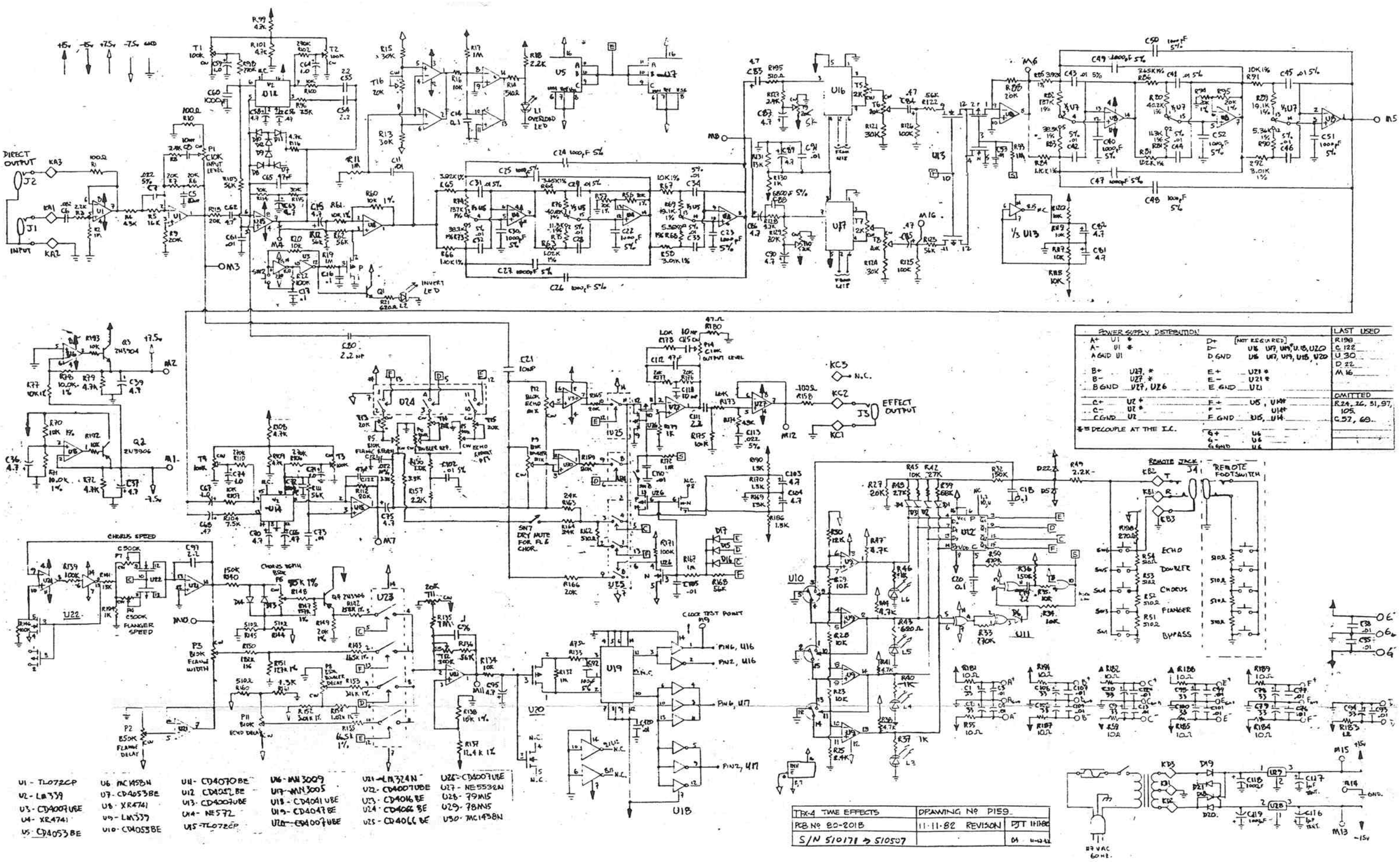

POWER SUPPLY DISTRIBUTION				LAST USED
A+	U1 *	D+	[NOT REQUIRED]	R198
A-	U1 *	D-	U16 U17, U19*, U18, U20	C 122
A GND	U1	D GND	U16 U17, U19, U18, U20	U 30
				D 22
B+	U27, *	E+	U21 *	M 16
B-	U27 *	E-	U21 *	
B GND	U27, U26	E GND	U21	
				OMITTED
C+	U2 *	F+	U5, U14*	R24, 26, 31, 97, 105
C-	U2 *	F-	U14*	C 57, 69.
C GND	U2	F GND	U5, U14	
		G+	U6	
		G-	U6	
		G GND	U6	

* = DECOUPLE AT THE I.C.

U1 - TL072CP
U2 - LM339
U3 - CD4007UBE
U4 - XR4741
U5 - CD4053BE
U6 - MC1458N
U7 - CD4053BE
U8 - XR4741
U9 - LM339
U10 - CD4053BE
U11 - CD4070BE
U12 - CD4052BE
U13 - CD4007UBE
U14 - NE572
U15 - TL072CP
U16 - MN3009
U17 - MN3005
U18 - CD4041UBE
U19 - CD4047BE
U20 - CD4007UBE
U21 - LM324N
U22 - CD4007UBE
U23 - CD4016BE
U24 - CD4066BE
U25 - CD4066BE
U26 - CD4007UBE
U27 - NE5532N
U28 - 79M15
U29 - 78M15
U30 - MC1458N

TPX-4 TIME EFFECTS	DRAWING No P159	
PCB No 80-201B	11·11·82 REVISON	PJT 11-11-82
S/N 510171 → 510507		04 11-12-82