# BOSS Slow Gear SG-1 Attack Delay

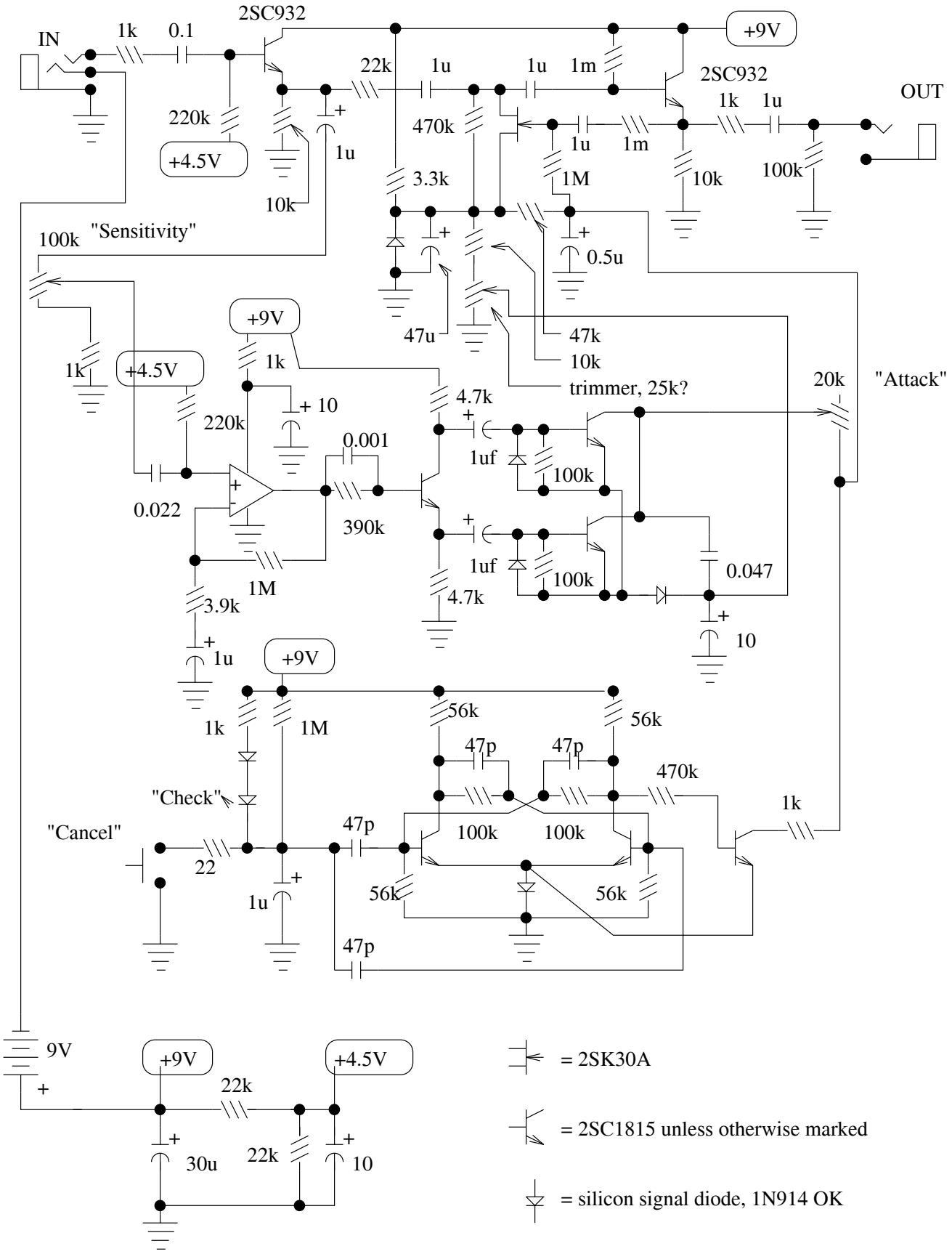


The SG-1 is an attack delay unit. A struck note is at first inaudible, then fades up, similar to a reversed tape recording.