Maestro Boomer 2

(Wah-Wah / Volume)

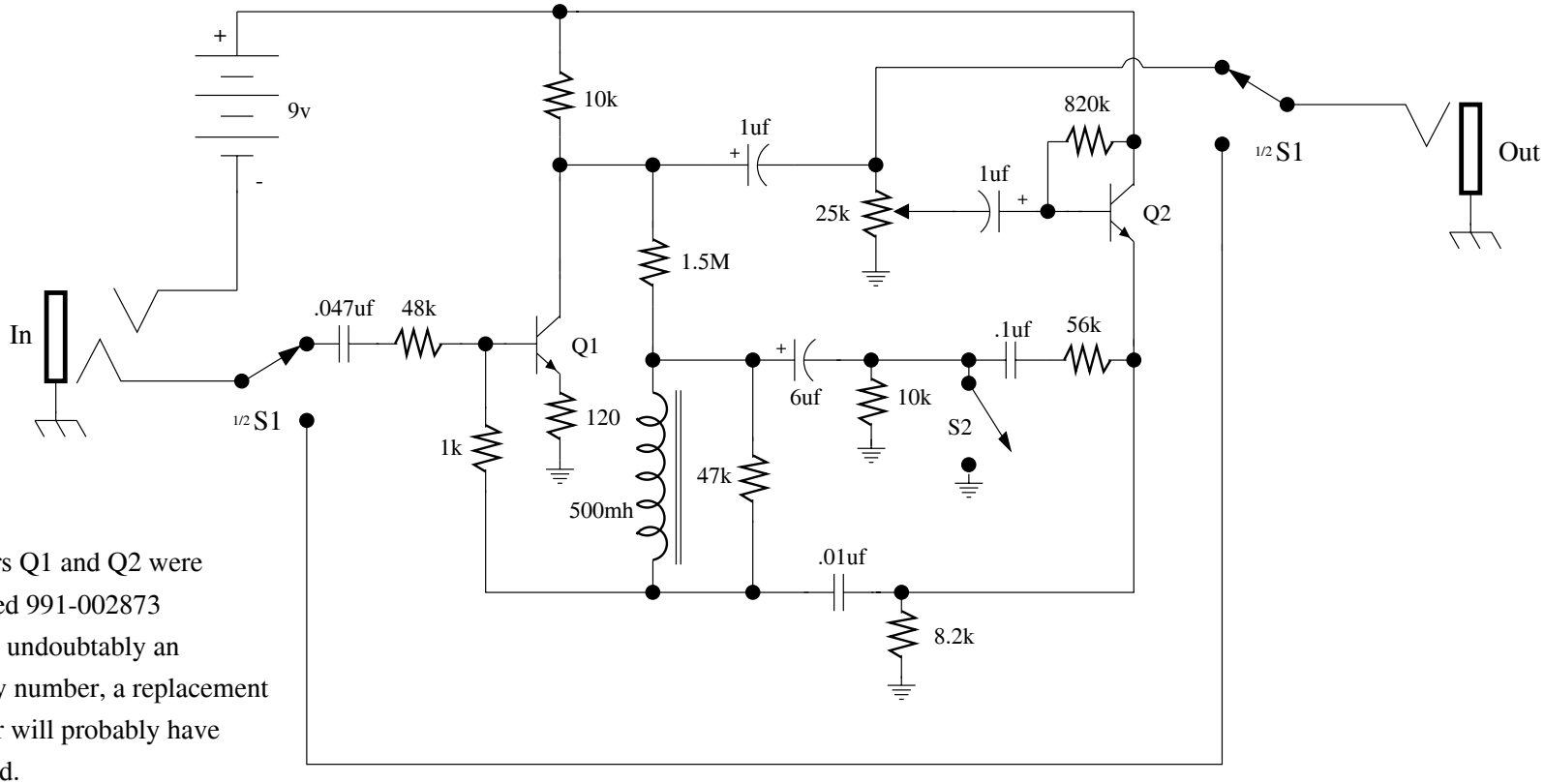

-Transistors Q1 and Q2 were designated 991-002873 This was undoubtably an inventory number, a replacement transistor will probably have to be used.

-S2 is used to switch the pedal between its modes of wah-wah (off as shown) and volume (on).

Model EG-2