JBL Incorporated, 8500 Balboa Boulevard, P.O. Box 2200, Northridge, California 91329 U.S.A.

Technical Manual

JBL4750A HIGH POWER TWO-WAY FULL-RANGE SYSTEM

SPECIFICATIONS

ACOUSTIC & ELECTRICAL SPECIFICATIONS:

- Nominal Impedance: 4 ohm L.F., 16 ohm H.F.
- Power Rating: AES Pink Noise: 1200W L.F. Continuous Program: 150W H.F.
- Frequency Response: 42 Hz to 17 kHz (±3dB)
- Sensitivity: 98 dB L.F., 112 dB H.F. SPL*
- Crossover Frequencies: 800 Hz to 1200 Hz, 7 kHz, 40 Hz Low Cut

SYSTEM COMPONENTS:

- Cabinet: C4750
- Grille: G4750
- Low Frequency Transducer: 300mm (12 in.) Cone Transducer (2206H) (2)

*1 Watt (2.83 V RMS) @ 1 Meter

SYSTEM COMPONENTS: *(cont'd)*

- High Frequency Transducer: 100mm (4 in.) Pure Titanium Diaphragm Compression Driver (2445J)
- Crossover Network: JBL/UREI 5235 Active Crossover 53-5334 Crossover Card

PHYSICAL SPECIFICATIONS:

- Enclosure Dimensions: 972mm x 620mm x 440mm D (38.25 x 24.43 x 17.31 in. D)
- Shipping Weight: 132 lbs. (60 kg)

WARRANTY INFORMATION:

- Refer to the Warranty Statement packed with each product.

WIRING DIAGRAM

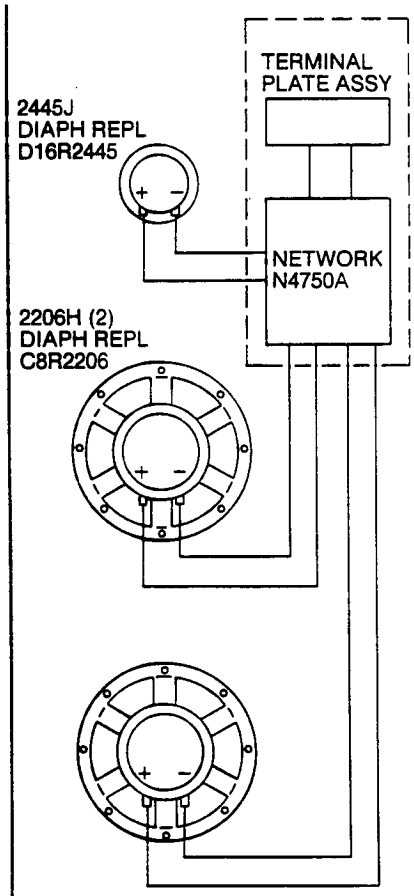

N4750A BYPASS SCHEMATIC

*2404H TRANSDUCERS ARE NOT SUPPLIED WITH 4750A. INSTALLATION WIRING IS SUPPLIED FOR USE

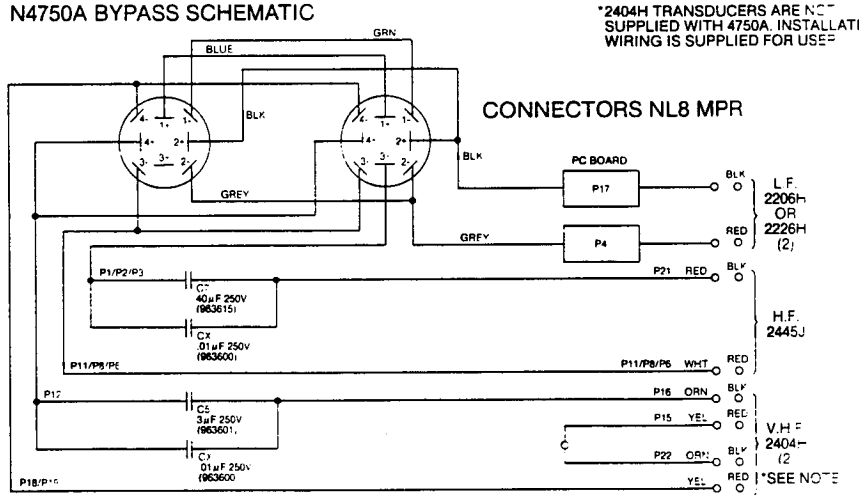

N4750A PASSIVE CROSSOVER SCHEMATIC

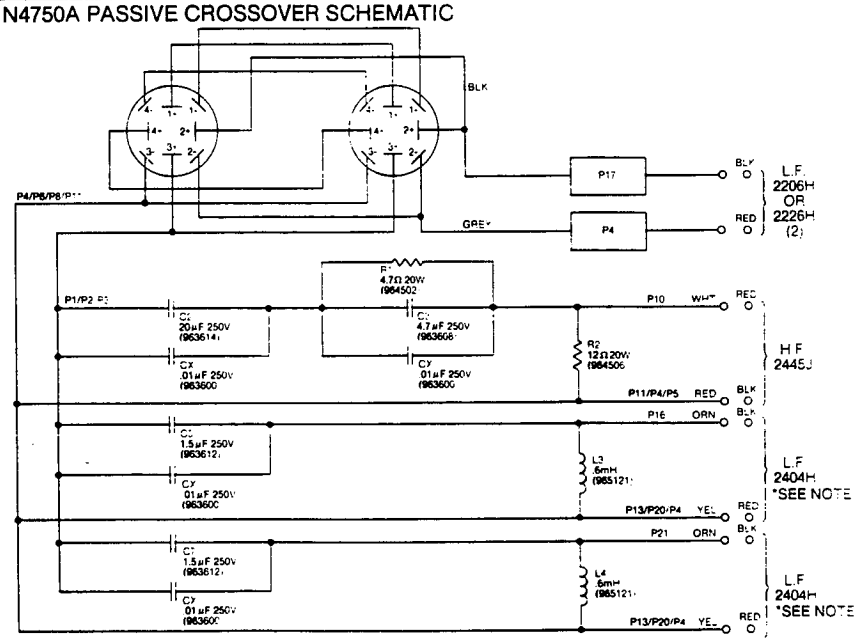

PACKAGE

Wood Shipping Crate

JBL4750A REV B
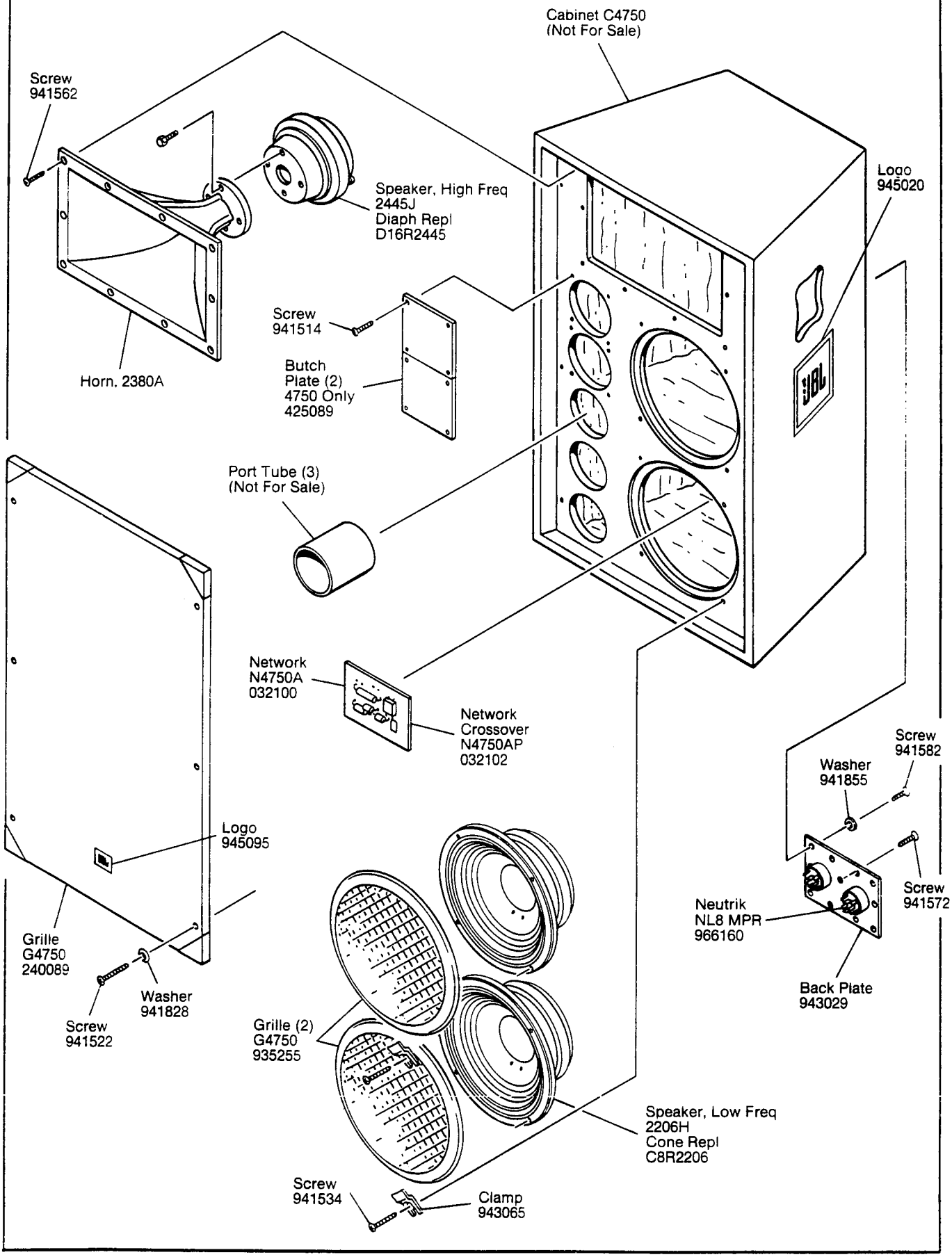
COMPONENT EXPLODED VIEW