FORUM

Conducted by Jim Rowe

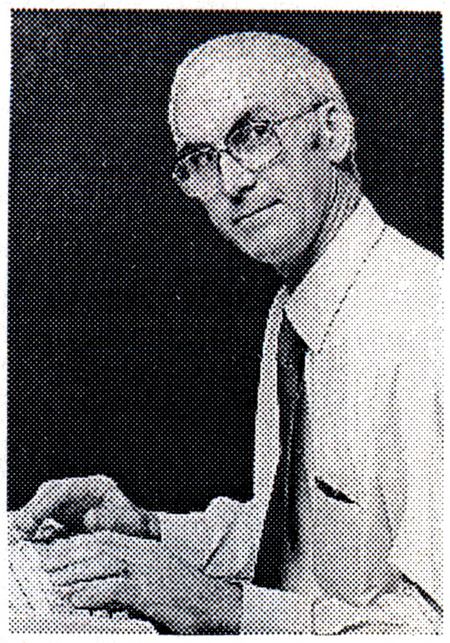

When the sound of capacitors is definitely NOT the sound of silence...

Well, as I commented at the end of last month's column, we seem to have been dragged back once again to another of those subjects so dear to the hearts of true-blue hifi enthusiasts. In this case it's the question of which kinds of capacitor should *not* be used in amplifiers, because of their tendency to produce distortion. (It makes a change from the one about fancy cables, at least!) I also have to apologise for our inadvertent publication of a 'Circuit and Design Ideas' item that could possibly contribute to a tragedy, in some circumstances.

Like the definition of 'good children' when I was a kid, the capacitors and other passive components in an audio amplifier are basically expected to be 'seen, but not heard'. In other words, they should perform their roles inside the amplifier in a totally 'transparent' manner, adding no colouration of their own. But of course there's a fair amount of evidence that *some* kinds of capacitor *do* introduce at least audible distortion, as Melbourne engineer Tean Tan noted in his article of September 1992 describing a valve amplifier design.

You may recall that I published a letter from fellow Melbournian engineer Graham Byrnes in the June column last year, criticising some of the claims made by Mr Tan. Then in the September column I published Mr Tan's reply, which referred to a couple of papers on the subject of capacitor behaviour written by US technical author Walter Jung and researcher Richard Marsh, and published in the February and March 1980 issues of the US magazine *Audio*.

Not surprisingly, I suppose, a number of readers have responded to both Mr Tan's further comments and those of Graham Byrnes. A couple of people very kindly sent in copies of the articles from *Audio*, as I mentioned at the end of last month's column, and one also sent in some further information of relevance. So one way and another, it seems, the subject seems to be crying out for some further coverage...

That STD-bar circuit

Before we do so, though, there's an urgent matter I should deal with first.

In the October issue, we published an item in the 'Circuit and Design Ideas' column contributed by a reader in New Zealand. It was a circuit designed to prevent unauthorised use of a tone-dialling telephone for making STD and ISD calls, and it basically worked by sensing the DTMF tone-pair for a leading 'zero', and disconnecting the call if it found one.

Now this seemed an innovative idea to us, even though the number of private phones in Australia currently using tone dialling is probably not great. That's why we published it. However as soon as the October issue had been published, we received a veritable flood of calls, letters and faxes — all castigating us for our stupidity and irresponsibility in publishing it, and in some cases claiming we would be responsible for a spate of tragedies and fatalities.

Why? Because we had forgotten that throughout Australia, the code for all emergency services is '000' — not '999', as it appears to be in New Zealand. So in Australia, the circuit would not only prevent people from making STD and ISD calls, but also from making emergency calls — and could therefore conceivably result in tragedies as a result.

Presumably our New Zealand contributor was not aware of this difference — but as our critics have pointed out, *we* certainly should have been. We should also have noticed, and at least drawn the attention of readers to the fact that if built, the circuit could not have been connected to a telephone wired to the public switched network, without breaking the law — because it would not be an 'approved attachment'.

What can I say, apart from admitting that we goofed, and goofed badly? As the one who must be held responsible, it's ultimately my fault that we let the item slip through, and didn't spot either its hidden potential for tragedy or its illegality. So I must apologise on both scores, and we'll try to prevent this kind of mistake from happening again.

Perhaps I should also warn all of our readers against building the circuit up and connecting it to their phone — not only because this *would* be illegal, but because they might well regret having done so if an emergency should arise.

Luckily, perhaps, not many private phones here seem to be connected to exchanges equipped for tone dialling — so the circuit probably doesn't have all that much appeal here as yet, in any case. Still, publishing the circuit gave our critics a good opportunity to 'jump on us', didn't it?

By the way, the PABX switchboard here at Federal Publishing is programmed to automatically 'bar' STD and ISD dialling-out from most of the extensions, and I imagine the PABX's of many other firms are similarly programmed. Presumably this would make it very difficult to dial '000' in the case of an office emergency, as well...

Back to capacitors

Now let's get back to capacitors and the sounds they make — or are alleged to make, at least.

Among the people who responded to Tean Tan's letter in the September issue was Graham Byrnes, the man who had taken issue with Mr Tan in the first place. So in fairness, let's look first at what Mr Byrnes has to say, in his own follow-up letter:

I see Tean Tan has returned to take up my gauntlet on the sound of capacitors. Since the appearance of my letters seems to amuse my students, a considerable number of whom are studying electronics

engineering, I thought I may as well throw back some comments.

First, I must admit that although I am aware of the article by Jung and Marsh, I have not read it. However there is another article, by H. Baggot (Elektor Electronics, February 1992), in which similar issues are discussed and measurements taken. Let me first quote:

'The third harmonic distortion of capacitors used in a high-pass filter with a load resistance of 100 ohms, measured at 250Hz, was less than 0.001% for all film types, and varied between 0.011% and 0.025% for electrolytic types.'

This was with capacitors of 2.2uF. He also showed that distortion increased with a decrease in frequency or load impedance. Note that in Mr Tan's amplifier the coupling capacitor operates into one megohm, in parallel with the triode grid capacitance.

Mr Tan invokes dissipation factor (DF), dielectric absorption (DA) and temperature variability. It should be noted that the first two of these are linear effects, and as such have absolutely no effect on the harmonic distortion. In fact DF is the ratio of effective series resistance to the imaginary component of the impedance. Since DF is approximately proportional to frequency, the stated 0.3% - 1% is meaningless, but if I assume it was measured at 1kHz, the calculated ESR in Mr Tan's coupling cap would still be less than three ohms had he used an MKT cap instead of MKP. Hardly a significant amount if the input is fed by a volume pot, or even direct from the output of a typical CD player, and absolutely trivial given the load impedance.

DF is crucial in low impedance circuits where power dissipation is a concern, such as power-factor correction capacitors and speaker crossover capacitors (my loudspeakers use MKP capacitors, originally destined for fluorescent lighting power-factor correction).

According to the measurements by Baggot, the temperature variations for MKP and MKT are nearly identical in magnitude between 20° and 80°C, but opposite in sign. In each case the total variation over this range is about 2.2%. With coupling capacitors, one is only concerned that the capacity be sufficient, not with its precise value. In the valve amplifier of Mr Tan, the high-pass filter formed by the coupling capacitors will cause a change in response of less than 0.5% at 20Hz, or 0.02dB, over the full 60° range.

Of the three mechanisms, only temperature dependence in combination with dissipation can cause harmonic distortion, as a large signal causes heating which leads to a capacitance change. This would produce a non-linear relationship between stored charge and voltage. However, given the level of dissipation involved (in the order of a pica-watt for 1V RMS input), this can't be taken seriously.

In my opinion only DA is potentially significant. Its effects are rather difficult to understand, since it produces a long term time averaging effect. This might be likened to the phase distortion of a second-order filter tuned to a very low frequency. Of course, a loudspeaker is at best a second order high-pass filter tuned to its resonant frequency (for a sealed speaker: ported designs are typically fourth order), so the effect is likely to be swamped by phase errors from that source. In the case of a transformer coupled amplifier, yet another source of phase error is present.

I cannot imagine any way that DA (which is usually modelled by a series combination of capacitor and resistor parallel to the ideal capacitor) could 'compress the dynamic range', unless Mr Tan has a rather original definition for dynamic range. Compression is a

non-linear process, and non-linear processes tend to show up in the THD measurements.

The above should not be taken to mean that I discount any subtle effects due to capacitors. In particular electrolytic capacitors, particularly if not properly biased, can introduce diode type effects. Moreover, my experience suggests they are rarely biased properly in consumer equipment (or EA project designs). Nor do I think it is inappropriate to use better quality components on a 'just in case' basis, or because the designer simply believes they sound better. For that matter, my own stereo (home-built from D-A converter to loudspeakers) is direct coupled from the D-A chip to the loudspeaker crossovers, and uses polycarbonate capacitors in the DC-servos.

A correspondent to one of the electronic bulletin boards concerned with audio (Graeme Gill) has recently suggested that on the basis of data concerning noise masking and hearing thresholds, an amplifier would need to achieve a S/(N+THD) ratio approaching 110dB to be undetectable in all circumstances. So there are many subtle possibilities still open.

However, to state that polyester capacitors cause 'high distortion' is a simple, testable assertion. It has been tested by Baggot, and in that case was shown to be false.

Also, that 'most audio enthusiasts are well aware' of something doesn't interest me in the slightest, since as a community 'most audio enthusiasts' have shown themselves to be exceptionally gullible. When such claims are made in the context of an amplifier using an iron-cored transformer in the output (with the concomitant problems of bandwidth limiting, non-linear magnetisation, premature saturation due to DC biasing by quiescent current imbalances) and harmonic distortion exceeding 2% midband (i.e., only 34dB down), I can only describe them as laughable.

Now to another matter: You recently requested feedback on the content of the magazine. Might I suggest that as an addition to the many free 'introduction to electronics' articles that appear in EA, it would be useful to have some 'current technology updates'.

For example, it was some time after hearing of current-mode op-amps that I was able to establish how one functioned (I'm a mathematician, not an engineer) by looking through some of the academic electronics magazines kept in the library of the university where I work. Most people do not have that luxury, and it is frustrating to read in 'Solid-State Update' about some new device whose function is only barely hinted at.

Oh, and a design for a high quality FM-stereo tuner would be nice, too, but given the problems of obtaining parts, etc., etc., I can well understand if that has to stay on my wish list!

Thanks for those comments, Mr Byrnes. It looks as if you're still not at all convinced by Mr Tan's claims about audible differences between polyester and other plastic film capacitors — especially when the amplifier concerned uses output coupling transformers, as did Mr Tan's valve amp. Still, you do seem to agree that it would be unwise to dismiss *all* suggestions regarding subtle audible effects associated with the various types of capacitor...

I note that you have also worked in a couple of suggestions regarding the magazine itself, in response to Peter Phillips' invitation in Information Centre. Fair enough, although your suggestion that we have 'current technology updates' seems to imply that we haven't done anything like this before. In fact we've already done some, including articles recently on I^2C and the ACCESS bus, CDMA spread spectrum communications, and direct digital synthesis or 'DDS'.

Much time, effort

We can certainly try to do more of these, as I agree they're worthwhile. The only problem is that this type of article can take a lot of time and effort to produce; you have to do a fair bit of research first, to understand the subject yourself, and then spend as much effort again working out how to explain things clearly. I suppose that's why we haven't produced as many of them as you might like, Mr Byrnes!

But we're digressing, of course. Let's get back to the subject of capacitors and their sounds. Another letter on this topic turned up from yet another Victorian reader, Mr Mike Hammer of Mordialloc. Mr Hammer is an electrical engineer, and as well as sending me a copy of the second Jung and Marsh article also sent in a copy of some other published material — some of which I'll refer to shortly. First, here's his own comments:

I am writing on the subject of capacitors and their effect on sound.

Whilst I agree that fancy audio cables must be treated with a fair degree of scepticism, there are objective tests that can be done to show that various capacitors are not as linear as you would expect. One such test is described in April 1986 Hi-fi News & Record Review, and consists of a reference and a test capacitor on each differential input of a precision operational amplifier.

I have tried these tests, and measured up to 3% residual output from a 1V p-p 1kHz sinewave input using a 47nF polyester capacitor as the test capacitor and an equivalent polystyrene capacitor as the reference. Two capacitors of the same dielectric give almost no residual.

Whilst I have not yet done a subjective back-to-back test, there can be no dispute that one of the above capacitor types is quite non-linear, and I will be using all polystyrene or polypropylene capacitors in future hifi gear that I build.

I hope the above is of interest to your readers. I have enclosed some reference material for your reading pleasure!

Thanks for your comments too, Mr Hammer, and also for sending those copies of the articles. It's interesting that you have carried out some of these tests yourself, and have found them to show significant differences between the various types of plastic film dielectric capacitors.

For the benefit of other readers, I have re-drawn the test circuit given in the *Hi-fi News & Record Review* article, and reproduced it here as Fig.1. By the way, the article concerned is attributed to Walter Jung (yes, the same one) and John Curl, and was apparently published originally in the US magazine *The Audio Amateur*. The basic test circuit was apparently developed by Walter Jung, with later refinements by John Curl in consultation with Scott Wurcer of Analog Devices.

Bridge arrangement

As you can see from Fig.1, the Jung/Curl test circuit is essentially a bridge arrangement, which compares the performance of a test capacitor (C_{TEST}) with that of a reference capacitor (C_{REF}). The two caps are used as the upper arms of a bridge, which is fed initially at least with a rectangular waveform from a pulse generator. The lower arm of the bridge on the C_{TEST} side is formed by load resistor R_L, with a value selected in the range from 200 ohms to 5k, while the lower arm on the C_{REF} side is formed from resistor R2 (100 ohms) plus a combination of three variables with values of 10k, 200 ohms and 10 ohms (all collectively called R_{ADJ1}), to allow primary balancing of the bridge. A precision differential amplifier with calibrated gain K (such as the Analog Devices AD624) is used to sense any bridge un-

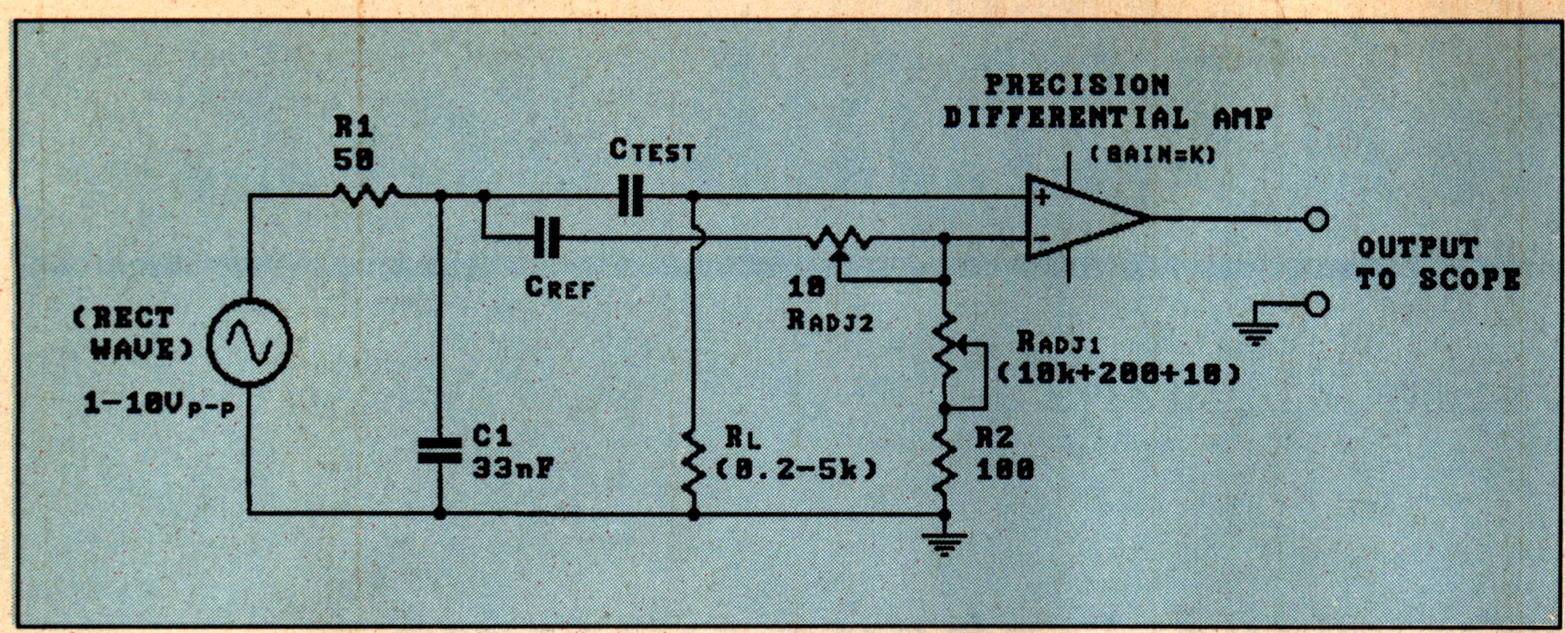

Fig.1: The capacitor test/comparison circuit used by Walter Jung and John Curl.

balance voltage, and provide a single-ended output to drive a scope.

To allow for the fact that the test capacitor may have a higher equivalent series resistance (ESR) than the reference cap, variable resistor R_{ADJ2} (10 ohms) is connected in series with C_{REF} to allow this source of unbalance to be compensated. Capacitor C1 is used in conjunction with R1 (the output resistance of the pulse generator) to limit the bandwidth of the bridge input signal to about 100kHz, to minimise instrumentation problems and also give a more realistic simulation of performance for audio signals.

The basic idea seems to be that with the bridge fed with a rectangular-wave signal of somewhere between 1V and 10V peak to peak, the variable resistors R_{ADJ1} and R_{ADJ2} are adjusted to give minimum output from the op-amp as measured on the scope. This balances the bridge in terms of the time-constants (R x C) on each side, and also in terms of the ESR of the two capacitors.

The remaining output signal (which can be measured and expressed as a percentage of the bridge input signal) is a measure of the residual bridge unbalance, and is taken in broad terms to indicate the difference in performance between the two capacitors. If you have two polypropylene or polystyrene caps, for example, there's almost no output at all.

The *HFN/RR* article shows photos of the input and output signal waveforms for various kinds of capacitors, compared in most cases with a polypropylene reference cap. The highest (= worst) outputs were with electrolytic (3-12%), solid tantalum (about 1%) and high-K ceramic (2.4%) caps, while the lowest/best output was with Teflon and polystyrene caps (around 0.001%). Polyester/Mylar caps gave figures around 0.1%, apparently.

So there do seem to be *measurable* performance differences between the various kinds of capacitor, and with signals in the audio spectrum. And Jung and Curl note that once the bridge circuit has been balanced, the rectangular wave test signal can be replaced with a normal audio signal, to allow the 'difference' or 'error' signal to be *heard* as well.

Jung and Curl seem to assume that these differences are predominantly due to differences in the DA (dielectric absorption) behaviour of the various dielectrics. However I note that in the following issue of *HFN/RR* (May 1986), a Dr Malcolm Hawksford suggests that this may be an over-simplification of the situation.

Dr Hawksford points out that Jung and Curl are using a very simplified model for the capacitors, with essentially just a perfect C in series with a resistor representing ESR. This tends to make primary bridge balancing only possible at a single frequency, whereas the rectangular wave test signal is really composed of a number of frequencies: the fundamental and odd harmonics. He argues that the test would therefore be improved by using a more realistic capacitor model, which allowed balancing for such parasitic elements as the series inductance and shunt resistance of the capacitors.

Still, Dr Hawksford *does* agree that even if there's a doubt about the exact composition of the error signal produced by this test circuit, and the aspects of capacitor behaviour which cause it, the fact that the error signal exists when one capacitor is compared with a high-quality unit *is* fairly conclusive evidence that the second capacitor is of poorer performance.

By the way, I *have* finally managed to read through the two articles by Jung and Marsh (whew!), and as Mr Tan noted their testing certainly seemed to suggest that the performance of metallised polyester/Mylar capacitors was significantly poorer than polypropylene, polystyrene or Teflon caps — with Teflon types being the best of all, from an audio point of view, and polystyrene next best. Their conclusions certainly leave you in no doubt that they recommend replacing polyesters with these types, as a relatively low cost way to improve the sound from many amplifiers and preamps.

To be honest, some of their conclusions seem a bit disconnected from the test results, although they aren't incompatible with them. Similarly some of the claims they make at the end of the second article seem a bit 'way out' — such as a claim that even one polyester cap in the audio chain can be clearly 'heard' in terms of its sound degradation. But on the whole, they do seem to have found significant performance differences between the various kinds of plastic film capacitor, at audio frequencies...

So there you have it. The bottom line seems to be that there *are* measureable differences between polyester caps and polypropylene or polystyrene caps, at audio frequencies, and a fair amount of evidence that the differences can be heard, as Tean Tan claimed — at least by those blessed with 'golden ears'.

If you're not happy with the sound from your hifi system, then, it may be worth replacing any polyester caps in the signal path with polypropylene or polystyrene caps — if you can afford them, and if they'll fit in. (They're usually rather bigger, as well as considerably more expensive...)

Whether or not this kind of upgrade would be justified in the case of a valve amplifier, with all of the additional problems associated with output transformers, is of course another matter — as Graham Byrnes has pointed out.

And that's it for another month, folks. See you here at the Forum same time next month, I hope? ❖

GOT ANY BRIGHT IDEAS!

Inventions Wanted

Many ordinary people have good ideas, if you have an idea simple or complex we would like you to contact us immediately

Confidential Disclosure

Call or Write

Invention Submission Corporation

Tel: (03) 629 7744

Fax: (03) 629 3919

520 Collins St., Melbourne

READER INFO NO. 48