U.D.C. 621.375.4.029.45:621.391.822.2/3

The Design of Low-noise Audio-frequency Amplifiers

By
E. A. FAULKNER,
M.A., Ph.D., C.Eng., F.I.E.R.E.,
M.I.E.E.†

Summary: This paper contains: (a) an account of the phenomenological theory of noise in linear amplifiers operating from resistive signal sources; (b) a discussion of the noise parameters of bipolar and junction field-effect transistors; and (c) examples of how these principles can be applied in practical circuit design for resistive sources.

List of Contents

1. Introduction
2. Noise in Linear Amplifiers
   2.1. Signal/noise ratio and noise figure
   2.2. Models of noisy amplifiers
   2.3. Variation of F with R_s. Equivalent noise voltage and current generators
   2.4. Noise resistance, optimum source resistance and minimum noise figure
   2.5. Noise-matching
   2.6. Noise figure of cascaded amplifiers
   2.7. Measurement of noise parameters
3. Transistor Noise
   3.1. Noise parameters of bipolar transistors
   3.2. Noise figure and noise resistances of bipolar transistors
   3.3. Noise parameters of junction f.e.t.s
   3.4. Comparison of j.f.e.t.s and bipolar transistors
4. Negative Feedback and Noise Figure
   4.1. Calculation of noise figure
   4.2. Practical application of the theory
   4.3. CE, CC and CB connections
   4.4. Use of negative feedback to improve noise figure
5. Practical Circuit Design
   5.1. Worst-case design of the input stage
   5.2. The feedback resistor
   5.3. Worst-case design of the second stage
   5.4. General comments on circuit design
6. Acknowledgment
7. References

1. Introduction

There are numerous published accounts of the theory of noise in transistor amplifiers, but it is evident that many circuit designers are not fully aware of the engineering realities which underlie the algebraic formalities. In this work we shall attempt to show the way in which the theory may be applied to the practical design of low-noise amplifiers for the audio-frequency range. To begin, we shall develop the basic theory in a way which is intended to emphasize the physical principles.

Throughout the discussion, we shall be assuming that the impedance of the signal source is resistive.

2. Noise in Linear Amplifiers

2.1. *Signal/noise Ratio and Noise Figure*

In Fig. 1(a) is shown a signal source, whose impedance will be assumed to be passive, resistive and equal to R_S, connected to a noisy infinite-impedance linear voltage amplifier of voltage gain A. The equivalent circuit shown in Fig. 1(b) represents the source as two voltage generators in series with a noiseless resistance. The first of these voltage generators, v_{NR}, is the Johnson noise voltage generated in the resistance R_S, and has therefore a mean-square value of $4R_S kT\Delta f$, where Δf is the frequency range being considered expressed in Hz; k is Boltzmann's constant in joule/degK, and T is the absolute temperature in degrees K.‡ The second generator v_S is

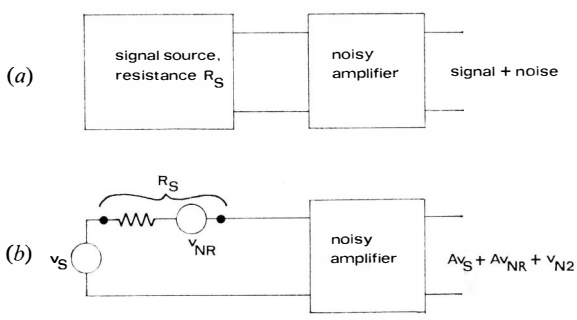

Fig. 1. Noise figure of an amplifier.
$F = 1 + \overline{v_{N2}^2}/4A^2R_S kT\Delta f.$

† J. J. Thomson Laboratory, University of Reading, Whiteknights, Reading, Berkshire.

‡ For $R_S = 1$ kΩ and $\Delta f = 1$ kHz, this gives 0·13 μV r.m.s. at 300°K. Note that in the case of a broad-band amplifier with 6 dB/octave roll-off, the equivalent noise bandwidth is greater than the 3 dB bandwidth by a factor $\pi/2$.

called the *signal* and includes all the remainder of the voltage generated in the source; for the purpose of this discussion it is simplest for us to visualize the signal as a purely sinusoidal generator, but in fact it may contain random components (for instance, from a noisy transducer or transmission line) and may even be completely random (for instance, where the amplifying system is being used to study a random process). The output of the amplifier contains three distinct components: an amplified signal voltage Av_S, an amplified noise voltage Av_{NR}, and an additional random voltage v_{N2} which is the noise contributed by the amplifier itself. There will be no correlation between v_{N2} and v_{NR}, so the total mean-square noise voltage at the output is $\overline{v_{N2}^2}+A^2\overline{v_{NR}^2}$. The noise figure of the system is then given by

$$F = \frac{\text{best possible signal/noise ratio}}{\text{actual output signal/noise ratio}}$$

$$= \frac{\overline{v_S^2}/\overline{v_{NR}^2}}{A^2\overline{v_S^2}/(A^2\overline{v_{NR}^2}+\overline{v_{N2}^2})}$$

$$= 1 + \frac{\overline{v_{N2}^2}}{4A^2R_S kT\Delta f} \qquad \text{.....(1)}$$

Equation (1) may be taken as a general definition of F.† It is important to notice that the noise generated by the amplifier can be formally represented as being due to a generator v_{N2}/A connected in series with the signal input.

As a practical guide, we may regard any system having a noise figure of 3 dB or better ($F \leqslant 2$) as being a *low-noise* system.

2.2. *Models of Noisy Amplifiers*

It will help us to understand the properties of actual amplifiers if we first set up some models which consist of idealized noiseless amplifiers in conjunction with resistances and/or generators connected to the input.

In Figs. 2(a), 2(b), 2(c), the amplifier is assumed to have infinite input impedance and to be noiseless so that the signal/noise ratio at the output terminals is the same as that at the input terminals.

In Fig. 2(a) a signal source, represented by a generator v_S in series with a resistance R_S, is connected directly to the amplifier, the input signal/noise ratio is $\overline{v_S^2}/4R_S kT\Delta f$ and the noise figure is of course unity. In Fig. 2(b) a resistor R_1 has been connected in series with the amplifier. Because of the infinite input impedance of the amplifier, R_1 has no effect on the input signal voltage but the mean-square input noise voltage increases to $4(R_S+R_1)kT\Delta f$; by the method used in equation (1) we find that

$$F = 1+(R_1/R_S) \qquad \text{.....(2)}$$

Figure 2(c) shows a resistor R_2 connected in parallel with the amplifier input terminals. This has the effect of reducing the noise voltage at the amplifier input, since the effective resistance is now the parallel combination of R_S and R_2, and its mean-square value is now $4kT\Delta f R_S R_2/(R_S+R_2)$. However, the mean-square signal voltage at the amplifier input is reduced by the factor $R_2^2/(R_S+R_2)^2$, and the overall result is a deterioration in the signal/noise ratio by the factor $R_2/(R_S+R_2)$. The corresponding noise figure is given by

$$F = 1+(R_S/R_2) \qquad \text{.....(3)}$$

This result can be obtained more conveniently by the use of the Norton equivalent circuit shown in Fig. 3. The signal, the noise in R_S, and the noise in R_2 are represented by parallel current generators and we arrive at equation (3) for the noise figure by

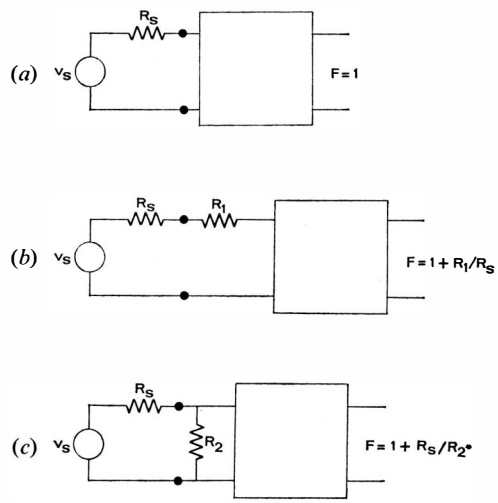

Fig. 2. Effect of series and parallel resistance on noise figure. The 'black box' represents a noiseless amplifier.

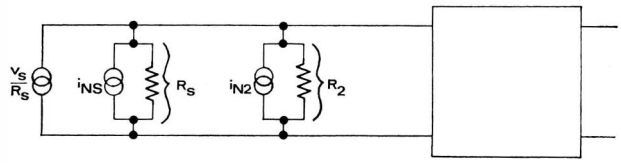

Fig. 3. Norton equivalent circuit of Fig. 2(c).
$F = (\overline{i_{NS}^2} + \overline{i_{N2}^2})/\overline{i_{NS}^2} = 1 + (R_S/R_2)$.

† There are some who hold that F should be called 'noise figure' only when it is expressed in dB, and should otherwise be referred to as 'noise factor'. Such a distinction seems impossible to justify on a logical basis.

considering current ratios, without explicitly referring to the magnitudes of the voltages appearing at the amplifier input terminals.

A great deal of confusion has arisen over the relation between noise figure and input resistance. It should be clear from Fig. 3 that if an amplifier has a parallel input resistor R_2, the effect of this on the noise figure can be completely described in terms of the noise current which it generates, without consideration of the simple shunting effect of the resistor on the actual magnitude of the signal or the noise. No passive resistor R can develop a mean-square noise current less than $4kT\Delta f/R$ (it may develop more noise if it has direct current flowing through it) and accordingly it is not possible for an amplifier to give a noise figure close to unity unless its passive input resistance is substantially greater than the source resistance. On the other hand, an additional *noiseless* resistance connected across the amplifier terminals in Fig. 3 will have no effect on the signal/noise ratio. We see therefore that when the input resistance is determined by the action of active components (for instance, by means of parallel feedback) it is possible in principle to make it much less than the source resistance without degrading the noise figure.

A point which may seem surprising in this discussion is the apparently quite dissimilar roles played by the series resistor R_1 in Fig. 2(b), which increases the noise without affecting the signal, and the resistor R_2 in Fig. 2(c), which reduces the noise but reduces the signal still more. The reason for this asymmetry is our choice of the amplifier as an ideal voltage amplifier of infinite input resistance. If we had chosen an ideal current amplifier with zero input resistance (infinite input conductance) then R_1 rather than R_2 would have been the one which affected the signal magnitude; expressions (2) and (3) for the noise figures would of course be unchanged. If we take the intermediate case and assume the amplifier to have a finite, though still noiseless, input resistance, then both R_1 and R_2 will have an effect on the signal magnitude, the noise figures still being unchanged.

2.3. *Variation of F with R_S. Equivalent Noise Voltage and Current Generators*

In Section 2.2 we have considered two simple models of noisy amplifiers. A noiseless amplifier in series with a resistor R_1 becomes a noisy amplifier with noise figure $[1+(R_1/R_S)]$, and a noiseless amplifier in parallel with a resistor R_2 becomes a noisy amplifier with noise figure $[1+(R_S/R_2)]$. Now if we calculate the way in which the noise figure of the most general linear amplifier can vary with R_S, making no assumptions apart from that of linearity, we find the relation

$$F = 1+k_1/R_S+R_S/k_2+k_3 \qquad \text{.....(4)}$$

where k_1, k_2 and k_3 are constants of the amplifier, all being in general functions of frequency. Equations (2) and (3) are, of course, special cases of equation (4).

Now let us consider the equivalent circuit shown in Fig. 4(a), in which a noisy amplifier is represented as a noiseless amplifier with a random voltage generator v_{NA}, and a random current generator i_{NA}, connected to its input terminals. Figure 4(b) shows the same circuit with all the noise sources, including the Johnson noise in R_S, shown as voltage generators in series with the input. In calculating the resultant noise voltage we must bear in mind that when two random noise generators v_{N1} and v_{N2} are connected in series, the resulting voltage v_N has a mean-square value given by

$$\overline{v_N^2} = \overline{v_{N1}^2}+\overline{v_{N2}^2}+2\gamma(\overline{v_{N1}^2}\,\overline{v_{N2}^2})^{\frac{1}{2}} \qquad \text{.....(5)}$$

where γ is a parameter called the *correlation coefficient* between the two generators, having some value between -1 and $+1$. Thus we obtain for the noise figure F:

$$F = 1+\frac{\overline{v_{NA}^2}}{4R_S kT\Delta f}+\frac{R_S\overline{i_{NA}^2}}{4kT\Delta f}+2\gamma\frac{(\overline{v_{NA}^2}}{4kT\Delta f} \qquad \text{.....(6)}$$

This equation has the same form as equation (4), having one term in R_S, one term in $1/R_S$ and one term independent of R_S. It follows that the equivalent circuit shown in Fig. 4(a) is an appropriate way of representing equation (4), and that the parameters k_1, k_2 and k_3 can be specified by specifying $\overline{v_{NA}^2}$, $\overline{i_{NA}^2}$ and γ. The result given in equation (6) is quite independent of the input resistance of the amplifier,

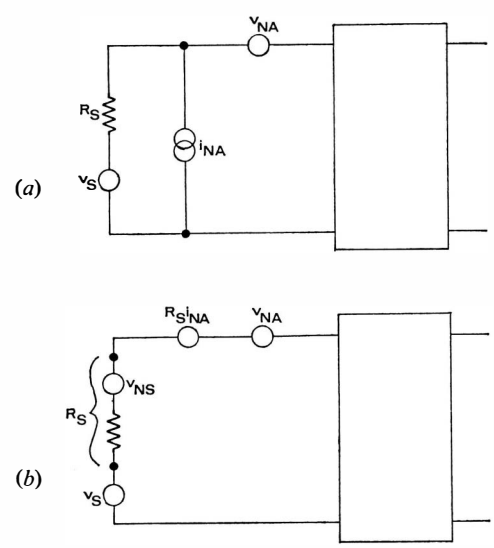

Fig. 4. Equivalent circuits of noisy amplifier. The 'black box' represents a noiseless amplifier.

provided that it can be assumed noiseless—that is, provided that the noise generators v_{NA} and i_{NA} include *all* the noise sources in the amplifier. It can be shown from linear-circuit theory that the value of k_3 is never great enough to require the magnitude of γ to be greater than unity.

It is important to notice that the equivalent generators in Fig. 4(a) are a purely formal way of representing the variation of F with R_S for a given amplifier, and include the effects of all the noise sources in the amplifier whether or not they originate in the input circuit. We can, for instance, choose values of $\overline{v_{NA}^2}$, $\overline{i_{NA}^2}$ and γ such that the mean-square noise voltage at the amplifier terminals is quite independent of the value of R_S. If we assume the input impedance of the amplifier to be a resistance r_i, we find that the required relation is

$$\overline{v_{NA}^2}/\overline{i_{NA}^2} = r_i^2, \quad \gamma = 1 \qquad \text{.....(7)}$$

These conditions are a means of representing an amplifier in which the noise comes entirely from the output stages.

2.4. *Noise Resistance, Optimum Source Resistance and Minimum Noise Figure*

The equivalent input noise voltage and current generators are nowadays widely used for specifying the noise performance both of complete amplifiers and of input devices. The units commonly used are the 'nanovolt per square-root-hertz' and the 'picoampere per square-root-hertz' which are somewhat cumbersome and uninformative. For most applications, and certainly in the field of a.f. amplifier design, it is much more satisfactory to use the *series noise resistance* R_{Nv} and the *parallel noise resistance* R_{Ni}. These quantities are defined by the relations

$$R_{Nv} = \overline{v_{NA}^2}/4kT\Delta f, \; R_{Ni} = 4kT\Delta f/\overline{i_{NA}^2} \qquad \text{.....(8)}$$

and it is convenient to remember that a noise resistance of x kΩ is equivalent to a voltage generator of $4\sqrt{x}$ nanovolt, or a current generator of $4/\sqrt{x}$ picoampere, per square-root-hertz at 300°K.

Using the noise resistances we can rewrite equation (6) in the more convenient form

$$F = 1 + R_{Nv}/R_S + R_S/R_{Ni} + 2\gamma\sqrt{R_{Nv}/R_{Ni}} \qquad \text{.....(9)}$$

This expression is obviously related to equations (2) and (3), which refer to the simplest models of noisy amplifiers.

The idea of an 'equivalent noise resistance' has long been used in connection with vacuum tubes, but this concept has traditionally referred to an equivalent series noise resistance only, and it follows from (9) that if we restrict ourselves to one equivalent noise resistance rather than two, we must make it depend on R_S. We shall see later that the term in γ can in many practical cases be ignored, so that the noise performance of a practical low-noise amplifier, or input transistor, will normally be specified by two resistances. These equivalent noise resistances will, of course, be functions of the frequency.

The formulation of equation (9) makes it particularly easy to understand how F varies with R_S. Because the equation contains terms in R_S and in $1/R_S$, F becomes very large in the limits of large and small R_S and has a minimum for an optimum value of R_S. Differentiation with respect to R_S shows that the minimum occurs when the two terms containing R_S are equal, and we obtain for the optimum source resistance

$$(R_S)_{opt} = \sqrt{R_{Nv}R_{Ni}} \qquad \text{.....(10)}$$

the optimum being the geometric mean of the two equivalent noise resistances. By substituting this value in equation (9) we may calculate the minimum noise figure, that is the value of F corresponding to $(R_S)_{opt}$:

$$F_{min} = 1 + 2(1+\gamma)\sqrt{R_{Nv}/R_{Ni}} \qquad \text{.....(11)}$$

We see that a good noise figure is obtainable if the series noise resistance is small compared with the parallel noise resistance, so that a value of R_S can be chosen which satisfies the condition

$$R_{Ni} \gg R_S \gg R_{Nv}$$

and the noise resistances have only a small effect in the input circuit.

In practical a.f. work, it is usually true to say that a noise figure of 1 dB = 1·26 is indistinguishable from the 'best possible' figure of 0 dB = 1·0, and equation (11) shows that this figure can be achieved for $R_{Ni} = 60\ R_{Nv}$ if γ is assumed to be zero. As we shall see later, this condition is easily satisfied by a high-gain bipolar transistor or a junction field-effect transistor, under the best operating conditions and in the best part of its frequency range. In fact, the assumption $\gamma = 0$ is correct in these cases, so that we can completely specify the noise performance at a given frequency by specifying the minimum noise figure F_{min} and the optimum source resistance $(R_S)_{opt}$. In terms of these parameters we can express equation (9) in the form

$$(F-1) = \tfrac{1}{2}(F_{min}-1)\left[\frac{(R_S)_{opt}}{R_S} + \frac{R_S}{(R_S)_{opt}}\right] \text{.....(12)}$$

It should be clear from this discussion that the low-noise capability of an amplifier, or of a transistor, in a given frequency range should be assessed on the basis of its minimum noise figure, rather than the noise figure obtained from an arbitrarily chosen source resistance, or an apparently 'low' value of series noise resistance.

Although a noise figure of 1 dB may be practically indistinguishable from 0 dB, it is sometimes very advantageous to use an input device with a minimum noise figure of much less than 1 dB, because such a device will maintain a satisfactory noise figure over a comparatively wide range of source resistance.

2.5. *Noise-matching*

Suppose that we have available a low-noise amplifier whose optimum source resistance $(R_S)_{opt}$ differs widely from the actual resistance R_S of the signal source to be used. In principle we can always 'noise-match' the amplifier to the source by using an ideal input transformer of ratio n; this reflects into the secondary circuit a signal voltage equal to nv_S, where v_S is the input signal voltage generator, and a resistance equal to n^2R_S. The 'best possible' signal/noise ratio then remains unchanged at $\overline{v_S^2}/4R_S kT\Delta f$, and accordingly we can improve the overall noise figure by choosing the transformer ratio so that n^2R_S approximates to $(R_S)_{opt}$.

In practice, it is often preferable to avoid the use of an input transformer for noise-matching in audio-frequency circuits unless a transformer is essential for some other reason such as d.c. isolation. In cases where $R_S < (R_S)_{opt}$ one can in principle achieve the same noise-figure improvement as is obtainable from an input transformer of ratio n (n being an integer) by the technique of using n^2 identical amplifiers connected in parallel; the combined amplifier has series noise resistance and parallel noise resistance both reduced by a factor n^2 compared with an individual amplifier.[1] The minimum noise figure is therefore unchanged, but the optimum source resistance reduced by a factor n^2.

2.6. *Noise Figure of Cascaded Amplifiers*

An important situation is that in which two amplifiers are connected in cascade, that is with the output of the first acting as the input of the second.

Suppose that the first amplifier is driven by a signal source of resistance R_1, and has a noise figure F_1 and voltage gain A_1 referred to this source resistance. The mean-square value of the noise voltage v_{N1} generated in the output circuit of the first amplifier is then given by

$$\overline{v_{N1}^2} = 4R_1 kT\Delta f.F_1 A_1^2 \qquad .....(13)$$

Now the noise voltage v_{N2} appearing in the output circuit of the second amplifier is the sum of two components: (i) a term equivalent to (13) containing the noise figure F_2 and voltage gain A_2 of the second amplifier referred to its source resistance R_2, which is in fact that output resistance of the first amplifier; and (ii) the noise voltage resulting from the amplification of v_{N1}:

$$\overline{v_{N2}^2} = 4kT\Delta f A_2^2(R_2F_2 + R_1F_1A_1^2) \qquad .....(14)$$

We thus obtain for the overall noise figure F the expression

$$F = F_1 + R_2F_2/R_1A_1^2 \qquad .....(15)$$

This result shows that, provided the ratio $A_1^2R_1/R_2$ is sufficiently large, the noise figure of the combined system becomes substantially equal to the noise figure of the first amplifier. This is of practical importance when $F_2 > F_1$, and is the principle of the *low-noise preamplifier*.

A convenient way of regarding the action of a preamplifier is to consider the equivalent input noise generators of the second amplifier, expressed as a single input voltage generator v_{NA2} in relation to its source resistance R_2, transferred back to the input circuit of the first amplifier. The resulting generator is v_{NA2}/A_1, and from this point of view we see that the function of the preamplifier is to reduce the equivalent effect on the input circuit of the noise generated by the second amplifier.

2.7. *Measurement of Noise Parameters*

If we wish to measure F for a given amplifying system, it may be necessary first to limit the frequency response to the required range by means of filters. A small signal v_S at the mid-band frequency is then introduced from a signal source of the required resistance R_S, and the output signal/noise ratio is measured and compared with the calculated 'best possible' value $\overline{v_S^2}/4R_S kT\Delta f$.

It is important to notice that a true-mean-square or true-r.m.s. measuring system must be used to obtain the signal/noise ratio. The use of standard noise sources, which in principle avoids the necessity for a measuring system of this type (and also avoids the necessity for an accurate knowledge of the bandwidth), is not usually desirable in the audio-frequency range; this is partly because of their limited accuracy, and partly because there is in principle no reason to suppose that their output has the same spectral distribution as has the noise to be measured.

In order to measure the equivalent noise generators and their correlation coefficient we must make three separate measurements of F at three different values of R_S. A measurement with a very low value of R_S gives R_{Nv} directly, the second term in (9) being the dominant one. Similarly a measurement with a very high value of R_S gives R_{Ni} directly. The correlation coefficient γ may conveniently be evaluated from a measurement of F with R_S approximately equal to its optimum value $\sqrt{(R_{Nv}R_{Ni})}$, but in most practical

cases γ is known to be zero. When performing these measurements one must bear in mind that the bandwidth may be strongly dependent on the source resistance.

3. Transistor Noise

3.1. *Noise Parameters of Bipolar Transistors*

The noise sources, apart from flicker noise, in bipolar transistors have been discussed by van der Ziel.[2,3] His conclusions can be expressed approximately in the form of a simplified equivalent circuit.

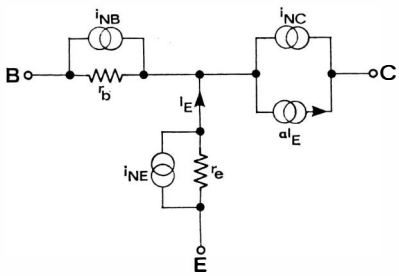

Fig. 5. Simplified equivalent circuit of bipolar transistor including noise generators.

In the circuit shown in Fig. 5, the transistor action is represented by the resistors r_b and r_e and the current generator αI_E. The transistor capacitances, and also the collector resistance, have been omitted. Three noise-current generators are shown, with mean-square values given by:

$$\left.\begin{aligned}\overline{i_{NE}^2} &= 2qI_E\Delta f\\ \overline{i_{NB}^2} &= 4kT\Delta f/r_b\end{aligned}\right\} \qquad \text{.....(16)}$$

$$\overline{i_{NC}^2} = 2qI_C[1-|\alpha|^2/\alpha_0]\Delta f \qquad \text{.....(17)}$$

For our present purposes, any correlation between these generators can be ignored.

The generator i_{NE} can be called 'shot noise' because its value is given by the same formula as for a temperature-limited vacuum diode. The generator i_{NB} represents the Johnson noise in the base resistance r_b. The generator i_{NC} was labelled 'partition noise' by van der Ziel because in the low-frequency limit it follows the same equation as does partition noise in a vacuum tube; but its mean-square value increases with frequency as $|\alpha|$ decreases and it is responsible for the falling-off in the noise performance of the transistor at high frequencies. A simple calculation shows that the i_{NC} generator is 3 dB above its low-frequency value at an angular frequency of $\omega_T/\sqrt{\beta_o}$, and then increases at 6 dB per octave. We notice that the 'corner frequency' for this noise generator is approximately the geometric mean of the common-base and the common-emitter cut-off frequencies, the latter quantity being ω_T/h_{fe0} and h_{fe0} being approximately equal to β_o.†

In practical audio-frequency designs we find that if we use modern silicon planar transistors, which are the only type of small-signal bipolar transistor that interests us here, we can usually ignore the frequency variation of i_{NC} expressed in equation (17), because $|\alpha|$ is always substantially equal to α_o. Experimentally we find that Fig. 5, in conjunction with equations (16) and (17), gives a satisfactory description of the noise behaviour of the transistor at the upper end of the audio-frequency range, but $\overline{i_{NC}^2}$ increases at low frequencies. The additional contribution to the noise at low frequencies is variously described as 'flicker noise', 'excess noise', or '$1/f$ noise' and we can express this effect to a reasonable approximation by means of the equation

$$\begin{aligned}\overline{i_{NC}^2} &= 2qI_C(1-\alpha_o)(1+\omega_F/\omega)\Delta f\\ &= 2q\alpha_o I_C(1+\omega_F/\omega)\Delta f/\beta_o \qquad \text{.....(18)}\end{aligned}$$

where ω_F is a parameter which may be called the *flicker-noise characteristic frequency*.

A noise source which has not yet been mentioned is the noise generated by the collector leakage current.[3] For modern small-signal silicon planar transistors operated at d.c. collector currents of 100 nA and above, this noise source is negligible; we shall therefore not discuss it further here.

3.2. *Noise Figure and Noise Resistances of Bipolar Transistors*

From the equivalent circuit of Fig. 5 in conjunction with equations (16) and (18), we can derive the following expression for the noise figure F in the common-emitter configuration:

$$F = 1 + \frac{r_b + r_e/2}{R_S} + \frac{(R_S + r_b + r_e)^2(1+\omega_F/\omega)}{2\beta_0 r_e R_S} \qquad \text{.....(19)}$$

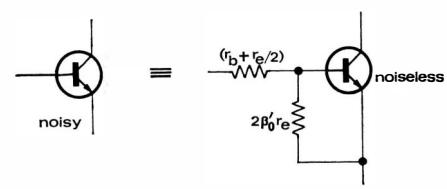

Fig. 6. Equivalent noise resistances of a bipolar transistor, assuming conditions (21) to be satisfied.

This formula is applicable in the frequency range well below $\omega_T/\sqrt{\beta_o}$.

† We use the symbol β_o for the direct current gain, and the symbol h_{fe0} for the low-frequency value of the alternating current gain. We use the term 'frequency' to refer either to the cyclic frequency f or the angular frequency ω, according to the context.

In order to interpret equation (19) in relation to equivalent series and parallel noise resistances, we must separate it into the terms in R_S, the terms in $1/R_S$, and the terms independent of R_S. We see that the effect of the flicker-noise factor in (19) is formally equivalent to a decrease in β_o as the frequency falls below ω_F, and we shall find it convenient to make use of the parameter β'_o defined by the relation

$$\beta'_o = \beta_o/(1+\omega_F/\omega) \qquad .....(20)$$

If now we can make the assumptions

$$\beta'_o \gg 1 \quad \text{and} \quad r_e \gg r_b \qquad .....(21)$$

we obtain from (19) the expression

$$F \simeq 1 + \frac{r_b + r_e/2}{R_S} + \frac{R_S}{2\beta'_o r_e} \qquad .....(22)$$

Equation (22) is a very important one. It states that, provided conditions (21) are satisfied, the noise generators in a bipolar transistor are equivalent to two uncorrelated generators which can be specified as a series noise resistance R_{Nv} and a parallel noise resistance R_{Ni}:

$$\begin{aligned} R_{Nv} &= r_b + r_e/2 \\ R_{Ni} &= 2\beta'_o r_e \qquad .....(23) \\ \gamma &= 0 \end{aligned}$$

This result is illustrated in Fig. 6.

We can more easily appreciate the meaning of equations (23) and Fig. 6 if we take a concrete example. Suppose that we have a transistor with $\beta_o = 100$ independent of I_C, and r_b equal to 200 Ω—a typical value for a modern transistor designed for low-noise a.f. applications. We remind ourselves that r_e is about 25 Ω at room temperature for I_C equal to 1 mA, and that r_e varies inversely with I_C. If we are considering the frequency range above the flicker-noise region, conditions (21) are satisfied for values of I_C up to about 100 μA. At this operating current the series noise resistance is 325 Ω, and the parallel noise resistance is 50 kΩ; from (10) and (11) we see that the optimum source resistance is about 4 kΩ, and the corresponding minimum noise figure is about 0·65 dB. Let us now put I_C equal to 1 μA; r_e becomes 25 kΩ and the series noise resistance about 12·5 kΩ, the contribution of r_b being negligible. The parallel noise resistance is 5 MΩ, the optimum source resistance 250 kΩ, and the minimum noise figure 0·4 dB. We can easily see from equations (23), (10) and (11) that when r_e is high enough (that is, when I_C is low enough) to make the effect of r_b negligible, the optimum source resistance is $r_e\sqrt{\beta_o}$, and the minimum noise figure is $(1+1/\sqrt{\beta_o})$.

It is interesting to notice that the low-frequency common-emitter input resistance of the transistor, which is given by $(r_b + h_{fe0} r_e)$, is approximately equal to the parallel noise resistance because, generally speaking,[4] h_{fe0} lies somewhere between β_o and $2\beta_o$. It follows that a good noise figure is not obtainable from a bipolar transistor in the common-emitter configuration unless it is operated under voltage-amplifier conditions—that is, with its input resistance substantially greater than the source resistance. A great deal of misunderstanding has arisen from the assertion made by nearly every author of texts on transistor circuit design that the bipolar transistor is 'basically a current amplifier.'

3.3 *Noise Parameters of Junction F.E.T.s*

In audio-frequency amplifiers, the junction f.e.t. sometimes provides a satisfactory alternative to the bipolar transistor as an input device. The noise mechanism in these devices has been discussed by van der Ziel,[5] whose conclusions can be summarized by the statement that in the absence of flicker noise the series and parallel noise resistances are given by the equations

$$\begin{aligned} R_{Nv} &= 0{\cdot}7/g_m \\ R_{Ni} &= 2kT/qI_G \qquad .....(24) \\ \gamma &= 0 \end{aligned}$$

where g_m is the low-frequency value of the transfer admittance, and I_G is the reverse gate current under the specified operating conditions. We have not been able to confirm these conclusions experimentally with the same degree of precision as that which applies to equations (23) for the bipolar transistor. However, it can easily be confirmed that the expression for R_{Nv} in equations (24) gives the correct order of magnitude, and that it correctly shows the general principle that the lowest value of R_{Nv} is obtained by operating the device with the highest possible value of g_m—in practice, this means with the highest possible value of drain current. For low-cost j.f.e.t.s at the present time, typical operating values of g_m are in the region 1–5 $m\Omega^{-1}$, and R_{Nv} at frequencies above the flicker-noise region is in the region 200 Ω–1 kΩ.

The expression for R_{Ni} in (24) predicts low-frequency values in excess of 50 MΩ for typical j.f.e.t.s, and this general conclusion can easily be confirmed experimentally; but for various practical reasons it is difficult to measure the exact dependence of R_{Ni} on I_G.

The effect of flicker noise in j.f.e.t.s is quite different from that in bipolar transistors in that it is R_{Nv} rather than R_{Ni} which deteriorates at the lower end of the frequency scale. To include this effect in equations (24) we may rewrite the first of these equations in the form

$$R_{Nv} = 0{\cdot}7(1+\omega_F/\omega)/g_m \qquad .....(25)$$

although this form of frequency dependence is only an approximate representation of what is found in practice. The actual way in which R_{Nv} increases as ω is reduced may vary considerably, even between individual specimens of the same type of j.f.e.t., and also

depends on the value of the drain current; in the flicker-noise region there is likely to be an optimum operating current for each individual device, which varies according to the frequency range being considered.[6]

By paying sufficient money (up to £5 at the time of writing, February 1968) one can obtain selected j.f.e.t.s with values of R_{Nv} less than 25 kΩ at 10 Hz, and Knott[7] has reported one specimen with R_{Nv} equal to 1 kΩ at 10 Hz and 300 Ω at 1 kHz. However, many low-cost j.f.e.t.s have a series noise resistance in the region of 1 MΩ at 10 Hz.

3.4. *Comparison of J.F.E.T.s and Bipolar Transistors*

It has already been pointed out that the low-noise capabilities of a device should, strictly speaking, be assessed on the basis of the minimum noise figure, which depends on the ratio of R_{Nv} and R_{Ni} according to equation (11), which may be expressed in the form

$$F_{min} = 1+2\sqrt{(R_{Nv}/R_{Ni})}$$

if the correlation coefficient γ is assumed to be zero. This condition is in fact always true for a practical j.f.e.t., and also for a practical bipolar transistor which is being operated under low-noise conditions.

Now for a bipolar transistor operated at a sufficiently low value of collector current to ensure that the effect of the base resistance is negligible, we see from equations (23) that the expression for F_{min} reduces to $(1+1/\sqrt{\beta_o'})$ if $\beta_o' \gg 1$. It is currently possible to obtain devices with β_o' in the region of 400 under these conditions throughout the audio-frequency range, and the corresponding value of F_{min} is 1·05 = 0·2 dB. To estimate the corresponding figure for a j.f.e.t., we may assume the correctness of equations (24) and substitute the somewhat favourable values of $g_m = 5\ \text{m}\Omega^{-1}$ and $I_G = 10^{-10}$ A. We then obtain $R_{Nv} \simeq 200\ \Omega$ and $R_{Ni} = 500\ \text{M}\Omega$. With these assumptions the value of F_{min} is 1·0013 = 0·006 dB. Even if we had assumed an unfavourable value of R_{Nv}, taking for example the 1 MΩ at 10 Hz mentioned above, we should have obtained a calculated value of 1·1 = 0·4 dB.

It is clear from these considerations that the j.f.e.t. is inherently a much lower-noise device than the bipolar transistor. However, in audio-frequency applications with a resistive signal source the advantage of having a better value of F_{min} is usually an illusory one, because with typical devices it is only obtained in conjunction with source resistances which are greater than those normally encountered in practice, and which cannot be achieved by the use of a transformer because of capacitive effects. Even when one has a source of very high resistance, one must take into account the input capacitance of the device itself, which was not included in the expression for R_{Ni} given in equations (24). These facts must be considered in relation to the fact that, in most practical audio-frequency applications involving a resistive source, a noise figure of 1 dB or less is indistinguishable from 0 dB. However, where the source is a capacitive one the f.e.t. may show considerable advantages over the bipolar transistor. Also, in instruments which are required to give a good noise figure over a wide range of source resistance the f.e.t. may be the best choice of input device, and for these applications the circuit is sometimes noise-matched to an acceptably low value of source resistance by the parallel-input technique discussed in Section 2.5.

4. Negative Feedback and Noise Figure

4.1. *Calculation of Noise Figure*

In calculating the overall noise figure of a negative-feedback system, the important first step is to represent *all* the noise sources, and also the operation of the feedback, as equivalent generators in the input circuit. If the amplifier employs series feedback, we use the voltage-generator representation shown in Fig. 7(a). The amplifier noise is represented as a single generator v_{N1}; in this case it is not necessary to use two generators to represent the noise, because we are assuming the value of R_S to be fixed. The generators v_S and v_{NS} represent the signal and the source noise respectively, and the generator v_F represents the feedback.

Now if A is the voltage gain of the amplifier referred to the input terminals, and β is the feedback ratio, we have

$$v_F = A\beta v_1 \qquad \text{.....(26)}$$

where v_1 is the voltage across the equivalent input terminals. Assuming that the equivalent amplifier has a noiseless input impedance Z_i (this implies that the generator v_{N1} includes the noise in the input resistor) we may write

$$v_1 = (v_S+v_{NS}+v_{N1}+v_F)Z_i/(R_S+Z_i) \qquad \text{.....(27}$$

and combining this with equation (26) we obtain

$$v_1 = (v_S+v_{NS}+v_{N1})Z_i/(R_S+Z_i)(1-A'\beta) \qquad \text{.....(28)}$$

where $A' = AZ_i/(R_S+Z_i)$

Equation (28) will give us the signal/noise ratio at the input terminals of the equivalent noiseless amplifier and hence the output signal/noise ratio. Before discussing it in more detail, we shall set up the corresponding equation for a parallel-feedback amplifier.

In Fig. 7(b) the signal, the source noise, the amplifier noise and the feedback are shown as current generators i_S, i_{NS}, i_{N1}, and i_F respectively. We can now write, corresponding to equation (26),

$$i_F = A\beta i_1 \qquad \text{.....(29)}$$

where A is the current gain of the amplifier and β the feedback ratio (alternatively A can be the transfer impedance of the amplifier and β the feedback admittance—the product $A\beta$ still being dimensionless). The result corresponding to (28) is

$$i_1 = (i_S + i_{NS} + i_{N1})R_S/(R_S + Z_i)(1 - A'\beta) \qquad \ldots\ldots(30)$$

where $$A' = AR_S/(R_S + Z_i)$$

Now equations (28) and (30) will give us the *closed-loop* signal/noise ratio, that is the signal/noise ratio as modified by the action of the feedback. It is most convenient to compare this with the *open-loop* signal/noise ratio, that is the signal/noise ratio that would be obtained if the feedback parameter β were assumed to be zero. We see from equations (28) and (30) that whether the feedback is of the series or the parallel type, its action is to reduce the effect of the signal, the source noise, and the amplifier noise all in the ratio $(1 - A'\beta)$. It is important to remember that this is a complex function of frequency.

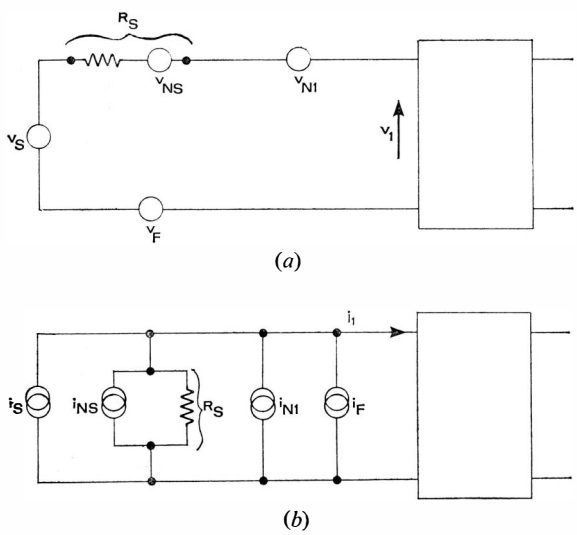

Fig. 7. Equivalent circuit of (a) series-feedback amplifier, (b) parallel-feedback amplifier. The 'black box' represents a noiseless amplifier.

It follows that if we are considering only the noise in a narrow bandwidth around the signal frequency then the closed-loop noise figure is the same as the open-loop noise figure. However, if we are considering the noise over a relatively broad band, the ratio of the closed-loop and the open-loop noise figures depends on the frequency dependence of the factor $(1 - A'\beta)$. The form of this frequency dependence also determines the relationship between the closed-loop bandwidth and the open-loop bandwidth, and the effect on the noise figure may be conveniently expressible in these terms; for instance, if (as is frequently the case) the closed-loop bandwidth is greater than the open-loop bandwidth, then the overall closed-loop noise figure is greater than the overall open-loop noise figure.

We may simplify the discussion by supposing that under closed-loop conditions the amplifier is followed by a filter which 'tailors' the frequency response to be the same as the open-loop response. In this case the closed-loop noise figure is the same as the open-loop noise figure. We may summarize this result by the following statement: *after any changes in the frequency response have been allowed for, the closed-loop noise figure is equal to the open-loop noise figure.*

From a practical point of view, the situations described by Figs. 8 are idealized. In fact, the feedback network will have a finite impedance which appears in series (Fig. 7(a)) or in parallel (Fig. 7(b)) with the input circuit; also it will generate some noise which adds to the equivalent amplifier noise generator. It is the job of the circuit designer to make these effects negligible.

4.2. *Practical Application of the Theory*

It follows from the result derived in the previous section that when designing a low-noise feedback amplifier, one must design the circuit so that it has the required noise figure before the feedback loop has been closed. Suppose, for example, that we wish to build an amplifier to work from a source resistance of 100 kΩ and to have an input resistance which is very high compared with this value. By the use of series feedback, the required input resistance can easily be achieved whatever the operating current of the input transistor. In order to decide on the correct value of this current, we must consider what the situation would be in the absence of the feedback. Now as we have seen in Section 3.2, a good noise figure is not obtainable from a bipolar transistor in the common-emitter configuration unless it is operated with its input resistance substantially greater than the source resistance; it follows that in the example quoted, the common-emitter input resistance of the input transistor must be more than 100 kΩ, and the operating current must be chosen accordingly.

This example helps to make clear a fallacy which has often led to unsatisfactory circuit and system design. This is the idea that the application of series feedback to an amplifier, because it increases the input resistance, can enable the amplifier to give a satisfactory noise figure from a higher source resistance than before.

Another error which has often led to difficulties is the failure to realize that when a series feedback resistor is inserted in the emitter lead of the input transistor, this resistor is effectively in series with the signal source and its value must be added to the series noise resistance of the amplifier.

Similarly, any resistor used for parallel feedback has the effect of reducing the parallel noise resistance of the amplifier. These considerations do not, of course, affect the general result that, for a given frequency response, the closed-loop noise figure is equal to the open-loop noise figure; but in calculating the open-loop conditions we must take care to include the effects of all the components of the feedback network, even although the latter is assumed to be inoperative.

4.3. *CE, CC and CB Connections*

It is often said that there are three basic ways of using a bipolar transistor in a linear circuit, these being the common-emitter (CE), common-base (CB), and common-collector (CC) configurations. Now although this approach is often useful it can also be very misleading, and has certainly led to a plethora of time-wasting algebraic work. Generally speaking, we should regard the basic amplifying action of the transistor as being with the input voltage applied between base and emitter, and the output current generated in the emitter-collector circuit; this approach is clearly brought out by the well-known hybrid-π equivalent circuit. The CB and CC configurations then appear as feedback modifications of the basic action: in normal feedback terminology, the CB arrangement is one of parallel current feedback, and the CC (emitter-follower) one of series voltage feedback.[8]

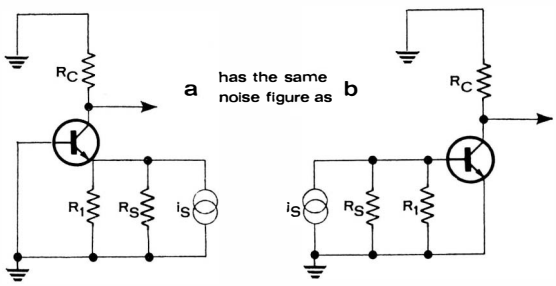

Fig. 8. CB noise figure.

The application of the theory of this section to the CB case is perfectly simple. Figure 8(a) shows the a.c. equivalent circuit of a CB-connected transistor, with an emitter resistor R_1 and operating from a signal source of resistance R_S, shown here in its current-generator equivalent form. The corresponding open-loop arrangement is shown in Fig. 8(b) and, by the principle developed in Section 4.1, we see that Figs. 8(a) and 8(b) will both give the same noise figure at any given frequency, assuming of course that the transistor is operating under the same d.c. conditions in the two cases. Some designers have made the mistake of assuming that, because the CB arrangement has a much lower input resistance than the CE arrangement, it can be used in conjunction with a much lower source resistance without detriment to the noise figure; it should be clear from Fig. 8 that this is not correct.

The case of the CC (emitter-follower) amplifier is not so simple, because of the fact that the output is the voltage across the emitter resistor itself, rather than the output current of the transistor. When a detailed calculation is done, we find the result illustrated in Fig. 9.

Since the feedback is of the series type, the signal source is most appropriately represented as a voltage

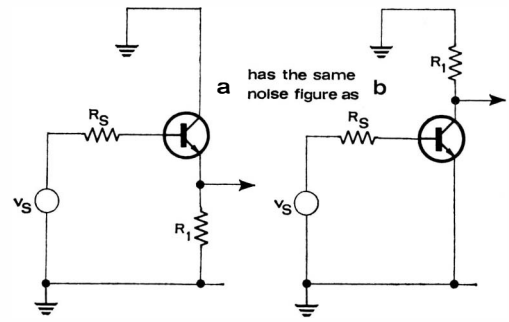

Fig. 9. CC noise figure.

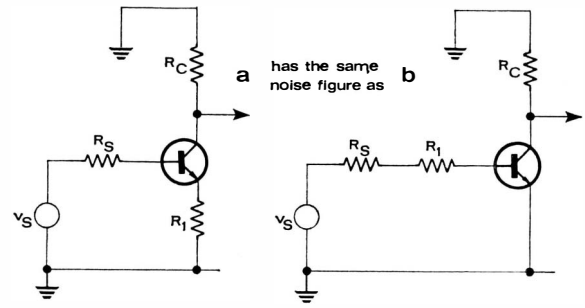

Fig. 10. Noise figure of CE amplifier with emitter feedback.

generator. The figure shows that in calculating the noise figure of a CC stage we must regard the resistor R_1 as being merely shunted across the output and not as being an additional resistance in series with the input circuit.

This is in contrast with the situation shown in Fig. 10, which is a CE amplifier with emitter feedback. Here the feedback is of the normal series current type, and the emitter resistor appears in series with the input circuit.

It is easy to make an experimental demonstration of the essential difference between the CC stage and

the CE stage with emitter feedback. The circuit of Fig. 10(a) may be set up with $R_C = R_1$, and driven from an a.f. signal source of very low resistance. With typical circuit values, say $I_C = 1$ mA and resistors of several kilohms, there is a spectacular difference between the signal/noise ratio measured at the emitter and at the collector, although of course the magnitude of the signal gain is unity at each point.

4.4. *Use of Negative Feedback to Improve Noise Figure*

In one sense, as we have seen, it is impossible to improve the noise figure of an amplifier by applying negative feedback; this statement is true when we are comparing the closed-loop situation with the open-loop situation for an amplifier whose circuit remains otherwise unchanged. On the other hand, we may compare one amplifier which provides certain performance parameters (e.g. gain, input impedance, output impedance, power output, efficiency, bandwidth) without the use of negative feedback, with another amplifier which utilizes the principles of negative feedback to obtain the same performance parameters. On this basis of comparison, it is often possible to obtain a great improvement in noise figure by the use of negative feedback.

A simple example of this arises in the case where one requires an amplifier to have a very low input resistance, say 1 Ω, but to give a good noise figure from a comparatively high source resistance, say 1 kΩ. One could obtain the required input resistance by connecting a 1 Ω resistor across the input terminals of a non-feedback transistor amplifier; but the effect on the noise figure would be disastrous. By the use of the parallel-feedback (operational-amplifier) technique we can obtain the required input resistance without any adverse effect on the noise figure.

Another example arises when we are dealing with power output stages, which may have a very poor noise figure. By adding a low-noise preamplifier, as discussed in Section 2.6, we may improve the noise figure; on the other hand, this preamplifier may increase the overall gain to an unacceptably high value. The use of negative feedback will enable the gain to be brought back to the required value without change in the overall noise figure.

Yet another case of practical importance is that in which we are required to provide a low-noise amplifier of widely variable gain. An output attenuator is usually not acceptable because of its effect on the dynamic range; and an input attenuator will ruin the noise figure. It is often possible to obtain a variable gain with constant noise figure by providing a negative-feedback network with variable feedback ratio.

Basically, the virtue of negative feedback is that it enables the input resistance, and the gain, of the system to be adjusted to the required value without detriment to the noise figure.

5. Practical Circuit Design

5.1. *Worst-case Design of the Input Stage*

The discussion in the previous sections has in principle given enough information to enable low-noise a.f. amplifiers to be designed. However, in practice the designer is not usually in possession of all the required parameters, and in this section we shall consider some experimental short-cuts which will prove useful.

The basic problem is the lack of reliable information about flicker-noise parameters, although in a later paper we shall be presenting the results of a large number of flicker-noise measurements on devices submitted to us by manufacturers as low-noise devices.

From a practical engineering point of view, we want to design the input circuit in such a way that we are sure that the component values are correct. If the circuit then does not give the required noise figure, we shall know that the fault is in the input device itself rather than in its operating conditions; the selection of a suitable input device, if only by a process of trial-and-error, is then a straightforward matter.

We shall assume that the required upper-limit noise figure F_1 has been specified—this will often be in the neighbourhood of 1–3 dB, because such a noise figure is likely to be indistinguishable from unity (0 dB). The first case to be considered is that in which the source resistance R_S is specified, and we do not wish to use a transformer. As a first choice for an input device we consider a bipolar transistor, the assumption being that it is a modern device designed for low-noise work at audio frequencies, having a direct-current gain of over 100 at collector currents down to 1 μA or less. As far as flicker noise is concerned, the situation is that we cannot accurately predict the value of β_o' (defined by equation (20)) as a function of frequency and collector current for any individual transistor; however, we know that generally the flicker-noise characteristic frequency ω_F falls as I_C is reduced, so that provided we have chosen a device in which the d.c. gain β_o is practically independent of I_C we shall obtain the least flicker noise by operating the transistor at as low a value of I_C as possible. In practice, the choice of I_C is normally made on the basis of equation (22); although this is only correct if conditions (21) are satisfied, it is always sufficiently accurate to be used for worst-case design. Equation (22) shows that even if β_o' were infinite a lower limit to I_C would be imposed by the requirement that

$$(r_b + r_e/2) < R_S(F_1 - 1) \qquad \text{.....(31)}$$

The actual optimum value of I_C cannot be determined accurately; however, it is reasonable to assume that β_o' does not vary very rapidly with I_C so that, for a given value of β_o', the transistor will be operating from its optimum source resistance when the second and third terms in equation (22) are equal. Now the worst acceptable value for β_o' is that which gives the required noise figure F_1 when the optimum source resistance is used; accordingly we obtain the condition

$$(r_b + r_e/2) = R_S(F_1 - 1)/2 \qquad .....(32)$$

as the basis for calculating the operating current of the input transistor.

If we are dealing with broad-band amplifiers, the effective value of β_o' is a suitable average over the required frequency range; the same principles apply to the choice of operating current.

In applying equation (32), we put in typical values of r_b for the transistor type to be used, if this has already been decided on; otherwise we put in a value of 100 Ω, which is about the lowest value that can be reliably obtained from present-day low-noise devices. If equation (32) then gives $r_b \ll r_e/2$, we may use a device with a higher value of r_b without substantially affecting the noise figure. On the other hand, it may be impossible to satisfy equation (32) with $r_b = 100\ \Omega$ and a positive value of r_e, in which case we use the parallel-transistor technique described in Section 2.5. In fact, it is generally undesirable to operate a transistor under conditions where $r_e < r_b$, because such conditions make unduly high demands on the value of β_o' if a good noise figure is to be achieved; in practical terms, this means that input transistors should not normally be run at collector currents greater than about 250 μA. Thus if equation (32) leads us to the requirement that $r_e < r_b$, we should consider the use of n transistors in parallel, applying equation (32) with R_S replaced by nR_S.

We now come to the case where an input transformer is to be used. In principle this means that we have a free choice of our value of effective source resistance, although in practice there will be an upper limit to the usable secondary impedance imposed by winding capacitance and also by mechanical considerations. In practice, for a noise figure of 1 dB it is not necessary to use a secondary impedance greater than 10 kΩ.

So far we have not considered the use of j.f.e.t. as an input device. This is because most of the currently available j.f.e.t.s have high values of R_{Nv} at low audio frequencies so that satisfactory noise-matching is only obtained from rather large source resistances. However, the time may come when low-cost j.f.e.t.s are available with values of R_{Nv} of a few hundred ohms throughout the audio-frequency range, and they will then be the natural first choice as input devices.

5.2. *The Feedback Resistor*

Any modern circuit design is likely to incorporate a high degree of negative feedback. This will involve the inclusion of a resistor either in series or in parallel with the input circuit, and we must now discuss the way in which the results of Section 5.1 may be modified to allow for the effect of this feedback resistor.

The effect on the input circuit of a series feedback resistor R_{FS} can very simply be included in the discussion of Section 5.1 by replacing the base resistance r_b by the total effective ohmic series resistance $(r_b + R_{FS})$. In the case where we have a parallel feedback resistor R_{FP}, we must include in equation (22) an additional term (R_S/R_{FP}); generally speaking, we should choose R_{FP} so that the contribution of this term to the noise figure is less than the contributions of the terms dependent on transistor characteristics. This implies that

$$R_{FP} > 3R_S/(F_1 - 1)$$

but this criterion may, in practical cases, not be sufficiently rigorous. When the required value of R_{FP} has been established, the operating current of the first stage may be determined from equation (32) with the quantity $(F_1 - 1)$ replaced by $(F_1 - 1 - R_S/R_{FP})$. This modification places more stringent requirements on the value of β_o', for which reason it may be desirable to satisfy the above condition with as large a margin as is practicable.

5.3. *Worst-case Design of the Second Stage*

One of the commonest errors in low-noise circuit design is the failure to ensure that the second stage does not contribute to the total flicker noise. In this section we shall make a worst-case analysis which will lead to a rule-of-thumb to aid the circuit designer. The worst case can be set up by assuming that the source resistance is zero, so that the input transistor is generating less noise than it ever will in a practical situation. With this assumption, we shall attempt to find a criterion which ensures that the noise contribution of the second stage is negligible.

If the input transistor is being operated under low-noise conditions, the effect of the base resistance r_b can be neglected in this discussion. From equations (23) we see that the noise in the input transistor can therefore be represented by a voltage generator with mean-square value $2r_{e1}kT\Delta f$, where r_{e1} is the emitter resistance of the input transistor. Now the transfer admittance (mutual conductance) of this transistor is approximately $1/r_{e1}$, so the noise current generated by the input transistor in the CE or CB configuration

has a mean-square value $2kT\Delta f/r_{e1}$. Now, as we shall see shortly, the noise contribution of the second transistor is normally dominated by the effect of the equivalent noise-current generator. Equations (23) show that the mean-square value of this generator is $2kT\Delta f/\beta'_{o2}r_{e2}$, where the subscript 2 refers to the values for the second transistor. If this is not to contribute substantially to the overall noise, we must establish the condition that

$$2kT\Delta f/\beta'_{o2}r_{e2} \ll 2kT\Delta f/r_{e1}$$

which is equivalent to the condition

$$\beta'_{o2}r_{e2} \gg r_{e1} \qquad \text{.....(33)}$$

To obtain the corresponding condition for the case of a CC (emitter-follower) input stage, we observe that if R_S is zero the output of the first transistor is equivalent to a voltage generator of mean-square value $2r_{e1}kT\Delta f$ in series with a resistance r_{e1}. This is equivalent to a current generator of mean-square value $2kT\Delta f/r_{e1}$ in parallel with r_{e1}, and it follows that condition (33) is also applicable to the CC configuration.

Although equation (33) has been derived on the assumption of a somewhat extreme worst-case, it provides a very convenient design basis for the instrumentation or communications engineer. At worst, it will result in a circuit which contains one more transistor than is strictly necessary; but transistors are cheap, and design and development effort is expensive.

It is interesting to notice that equation (33) cannot possibly be satisfied either by the traditional 'Darlington pair' configuration, in which the emitter current of the input transistor is equal to the base current of the second transistor, or by the analogous complementary design in which the collector current of the input transistor is equal to the base current of the second transistor (see Fig. 11). This is because the collector current in the second transistor is greater than that in the first transistor by a factor of β_{o2}, so that $r_{e2} = r_{e1}/\beta_{o2}$. Thus with a zero source resistance, even in the absence of flicker noise, the second transistor makes a noise contribution equal to that in the first transistor; in practice the situation will probably be made very much worse by the effect of flicker noise. The direct-coupled stages shown in Fig. 11 can be greatly improved by shunting the input of the second transistor with a resistor to enable it to run with a lower value of collector current, appropriate changes being made in the remainder of the circuit.

Now even a reasonably low-noise transistor may show a value of β'_o approaching unity at the lower end of the audio-frequency range; this would be true, for example, at 20 Hz if β_o were 100 and the flicker-noise characteristic frequency ω_F were 2 kHz. Therefore, if we want to be reasonably sure, even under the worst conditions (zero source resistance) and in the lowest part of the audio-frequency range, that the second transistor does not contribute to the overall noise, we make use of condition (33) in the form

$$r_{e2} = r_{e1} \qquad \text{.....(34)}$$

This condition is equivalent to the statement that *the d.c. collector current in the second transistor should be equal to that in the first transistor.*

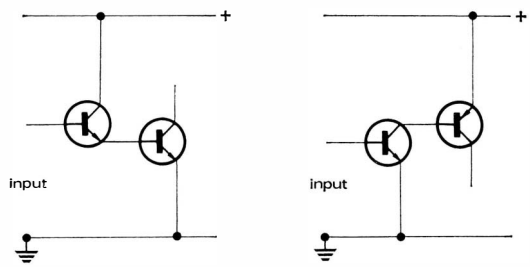

Fig. 11. Examples of noisy circuit design.

As a last step, we must arrange that the voltage gain of the first stage is sufficiently high to ensure that we have satisfied the requirement, mentioned above, that the voltage-generator noise in the second transistor should be negligible. First we assume that the first stage has the CE or CB configuration, with collector load resistance R_C—this being assumed to include the effect of the input resistance of the second transistor. As we have seen, the noise current generated by the input transistor has a mean-square value $2kT\Delta f/r_{e1}$, and this provides a noise voltage across R_C with mean-square value $2kT\Delta f R_C^2/r_{e1}$. Now the voltage-generator noise in the second transistor has a mean-square value $2r_{e2}kT\Delta f$, so our required condition is

$$R_C^2 \gg r_{e1}r_{e2} \qquad \text{.....(35)}$$

This condition is easily satisfied. The lowest value we are likely to use for R_C arises in a direct-coupled complementary circuit where the direct voltage drop across R_C is only about 600 mV. Assuming for example that the d.c. collector current in the first transistor is 10 μA, then r_{e1} will be 2·5 kΩ and R_C will be 60 kΩ. It is clear that (35) will be satisfied even if the second transistor has the same d.c. collector current as the first so that $r_{e2} = r_{e1}$.

For a CC (emitter-follower) input stage the situation is not so favourable. Since the voltage gain is unity, the condition equivalent to (35) is

$$r_{e1} \gg r_{e2} \qquad \text{.....(36)}$$

which can be formally obtained from (35) by putting $R_C = r_{e1}$ but which is really self-evident. Obviously, we cannot satisfy both condition (34) and condition (36); for this reason the CC configuration is inherently more noisy for an input stage than the CE or the CB configurations. In some practical cases the difference is so slight as to be negligible, and the CC stage may be preferred for other reasons.

5.4. *General Comments on Circuit Design*

There are many textbooks on transistor circuit design, but it is an unfortunate fact that on the whole they are highly unsatisfactory.

We must avoid being misled by the idea of a 'norm' of amplifier design consisting of a string of separate single-transistor or two-transistor stages with capacitor coupling and with feedback (if any) provided by individual emitter resistors. The amplifier should be designed as a whole, with direct coupling between the transistors unless there is some good reason to the contrary, and with a high degree of d.c. and a.c. feedback taken around each direct-coupled group. As a matter of course, silicon transistors will be used throughout. Apart from the obvious economies in components, this approach enables a greater number of transistors to be included in the feedback loop so that the noise contribution of the feedback resistor can be reduced to the lowest possible level.

We must also avoid the assumption that noise considerations are a sort of 'extra' which only needs to be taken into account under exceptional circumstances. As a matter of general engineering workmanship, the good designer ensures that, whatever the specification, his circuits do not show an *unnecessarily* high noise level; and a prospective purchaser who has to choose between two otherwise identical pieces of equipment will always choose the one showing the lower noise level. It is by no means unusual to find a factor of 100 or more between the noise levels shown by the product of a 'noise-conscious' designer and the product of a designer who follows typical textbook principles.

6. Acknowledgment

This work was supported by a Ministry of Defence contract.

7. References

1. Faulkner, E. A., 'Optimum design of low-noise amplifiers', *Electronics Letters*, **2**, pp. 426–7, November 1966.
2. van der Ziel, A., 'Theory of shot noise in junction diodes and junction transistors', *Proc. I.R.E.*, **43**, pp. 1639–46, November 1955.
3. van der Ziel, A., 'Theory of shot noise in junction diodes and junction transistors', *Proc. I.R.E.*, **45**, p. 1011, July 1957. (Letter.)
4. Faulkner, E. A. and Dawnay, J. C. G., 'Characteristics of silicon transistors', *Electronics Letters*, **1**, pp. 224–5, October 1965.
5. van der Ziel, A., 'Thermal noise in field-effect transistors', *Proc. I.R.E.*, **50**, pp. 1808–12, August 1962.
6. Knott, K. F., 'Conditions for optimum noise performance in l.f. amplifiers employing junction f.e.t.s.', *Electronics Letters*, **4**, p. 92, March 1968.
7. Knott, K. F., 'Comparison of varactor-diode and junction-f.e.t. low-noise l.f. amplifiers', *Electronics Letters*, **3**, p. 512, November 1967.
8. Faulkner, E. A., 'Principles of Linear Circuits'. (Chapman & Hall, London, 1966.)

Manuscript received by the Institution on 2nd April 1968. (Paper No. 1197/CC12.)

© The Institution of Electronic and Radio Engineers, 1968