Zetex Class D 75W
Slave Channel

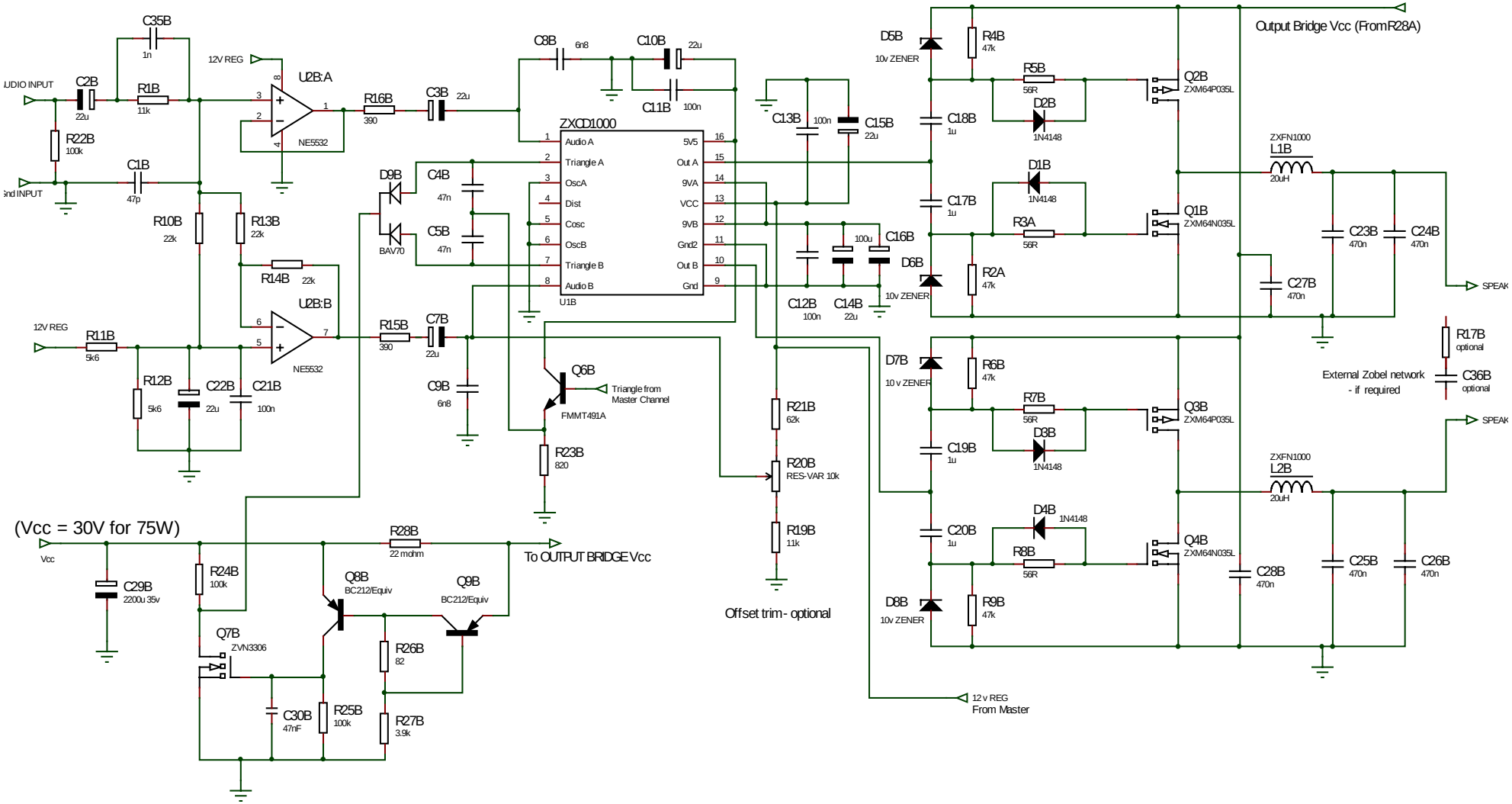

ZETEX