Zetex Class D 50W
Master Channel

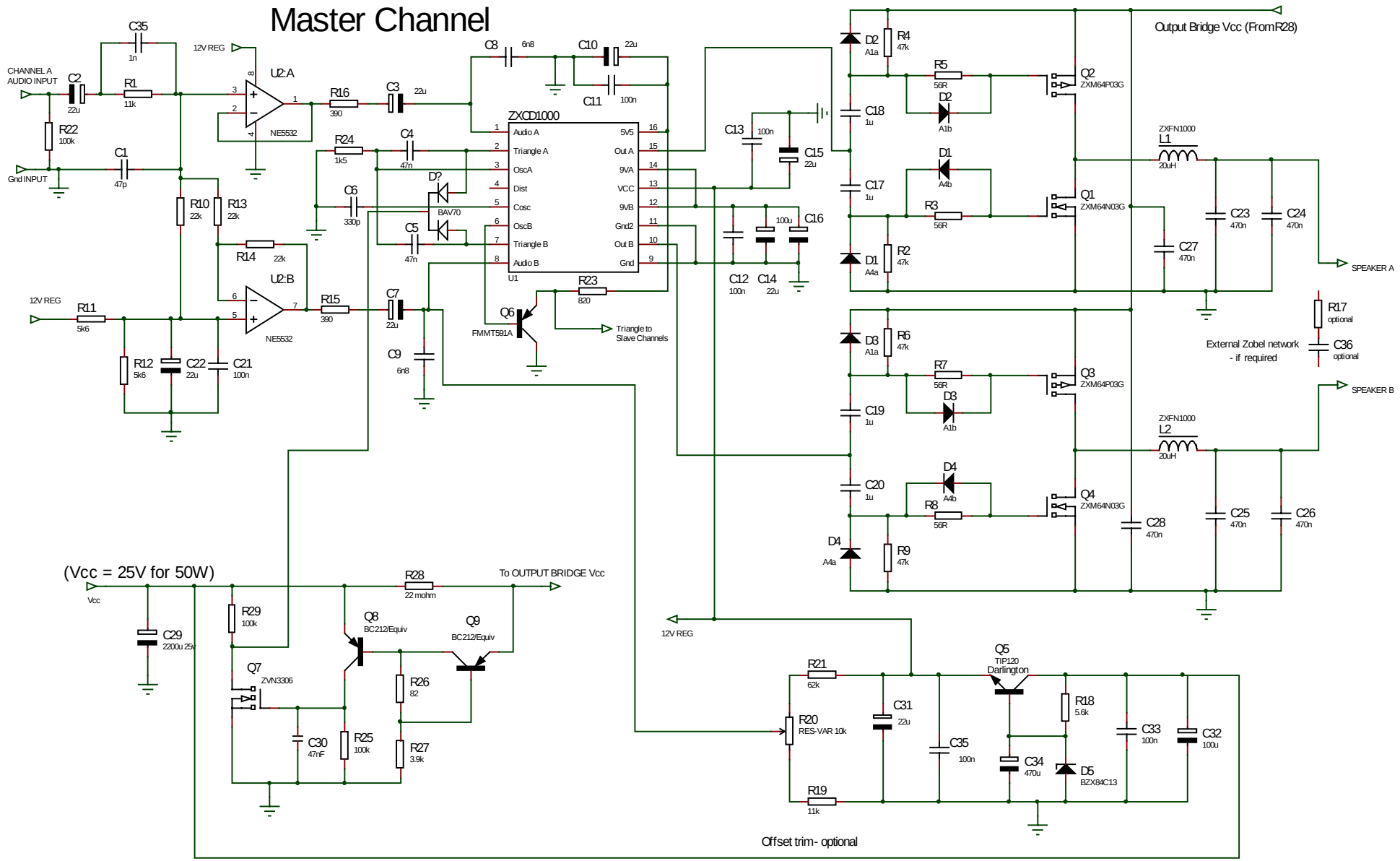

ZETEX

Zetex Class D 50W
Slave Channels

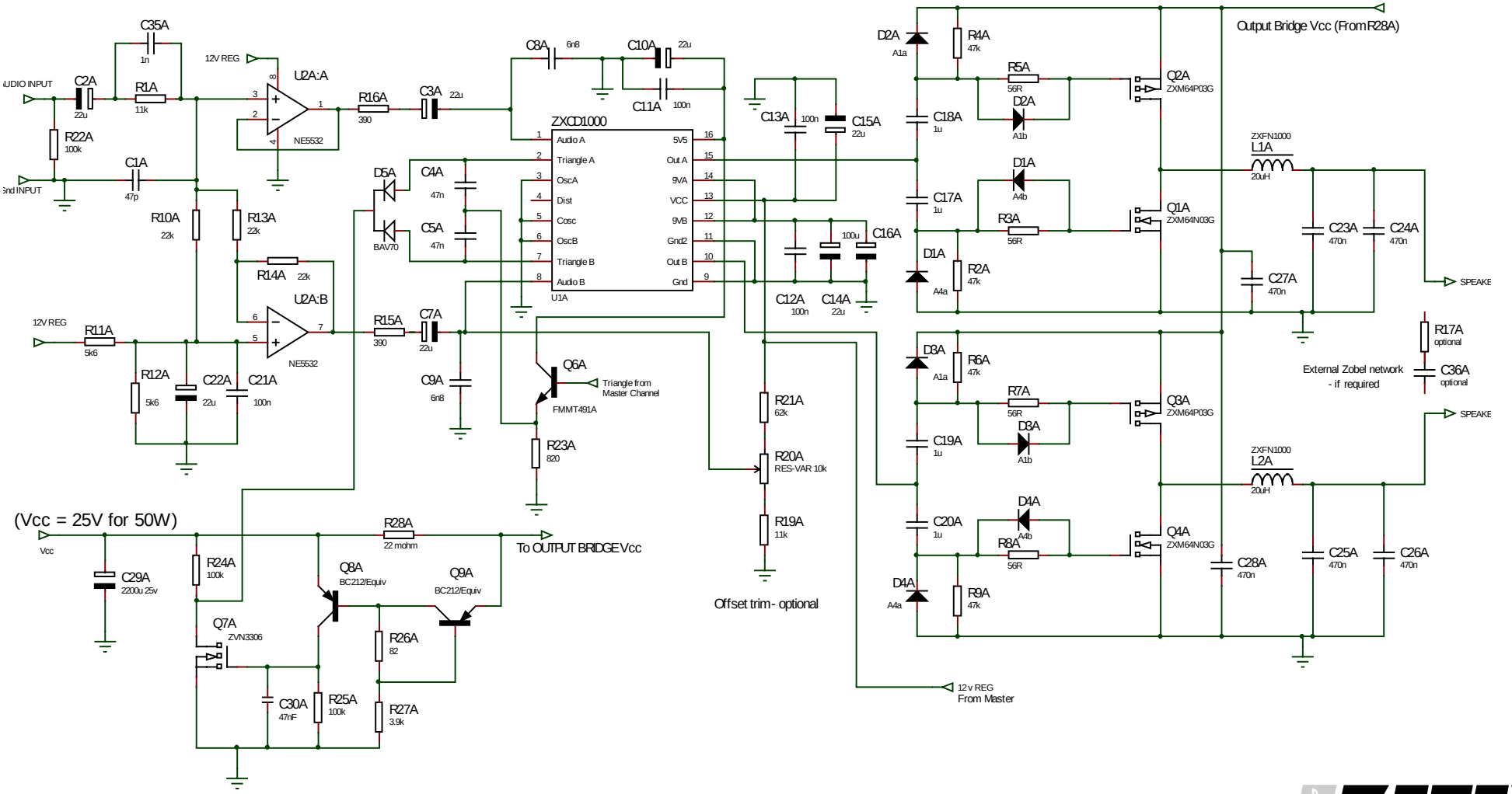

ZETEX