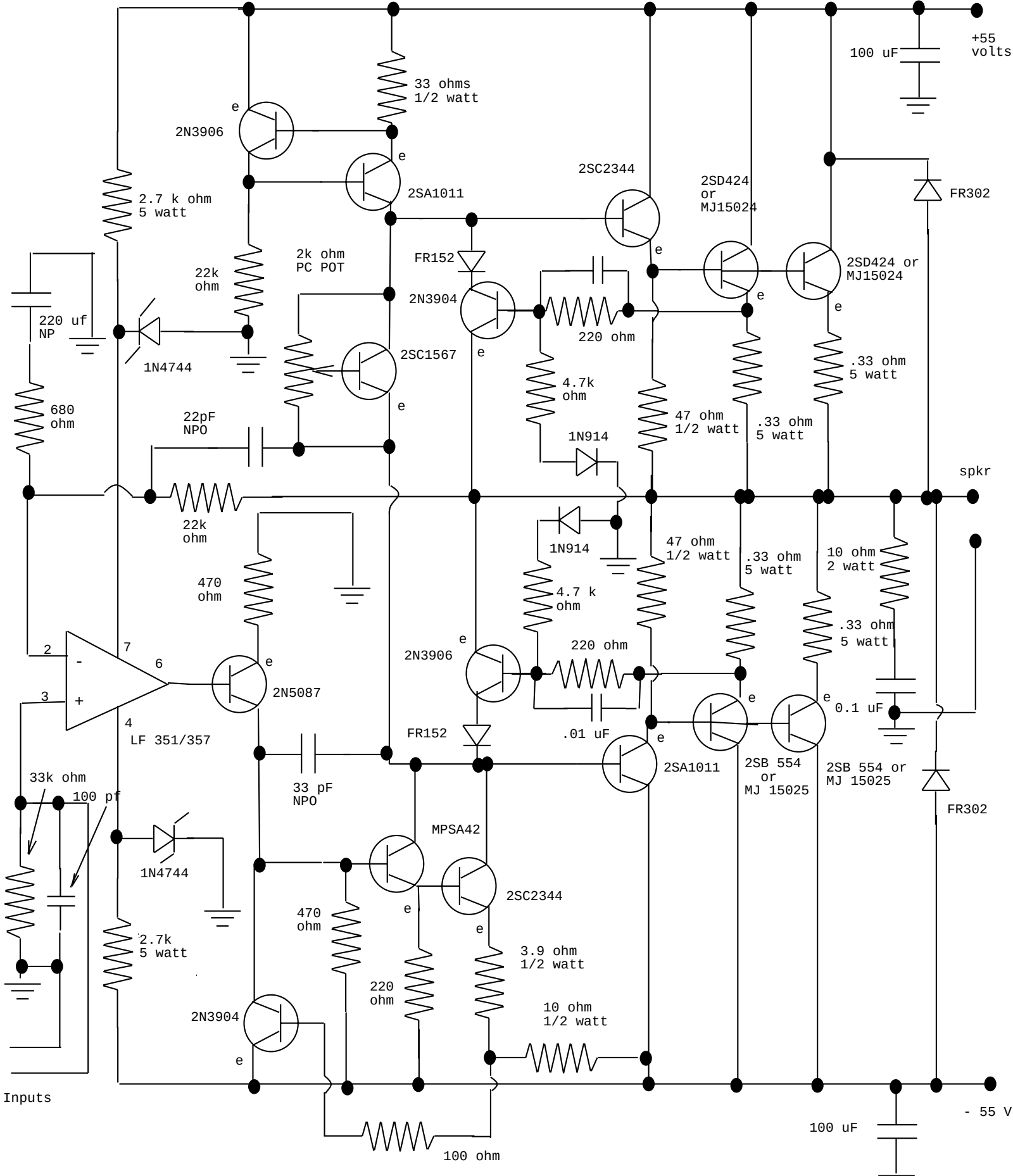

100 watt RMS amplfier "the KM241"
(c) 1989, 1991 Warren "Dr. Diode" Gaiewski
----------|>|---------