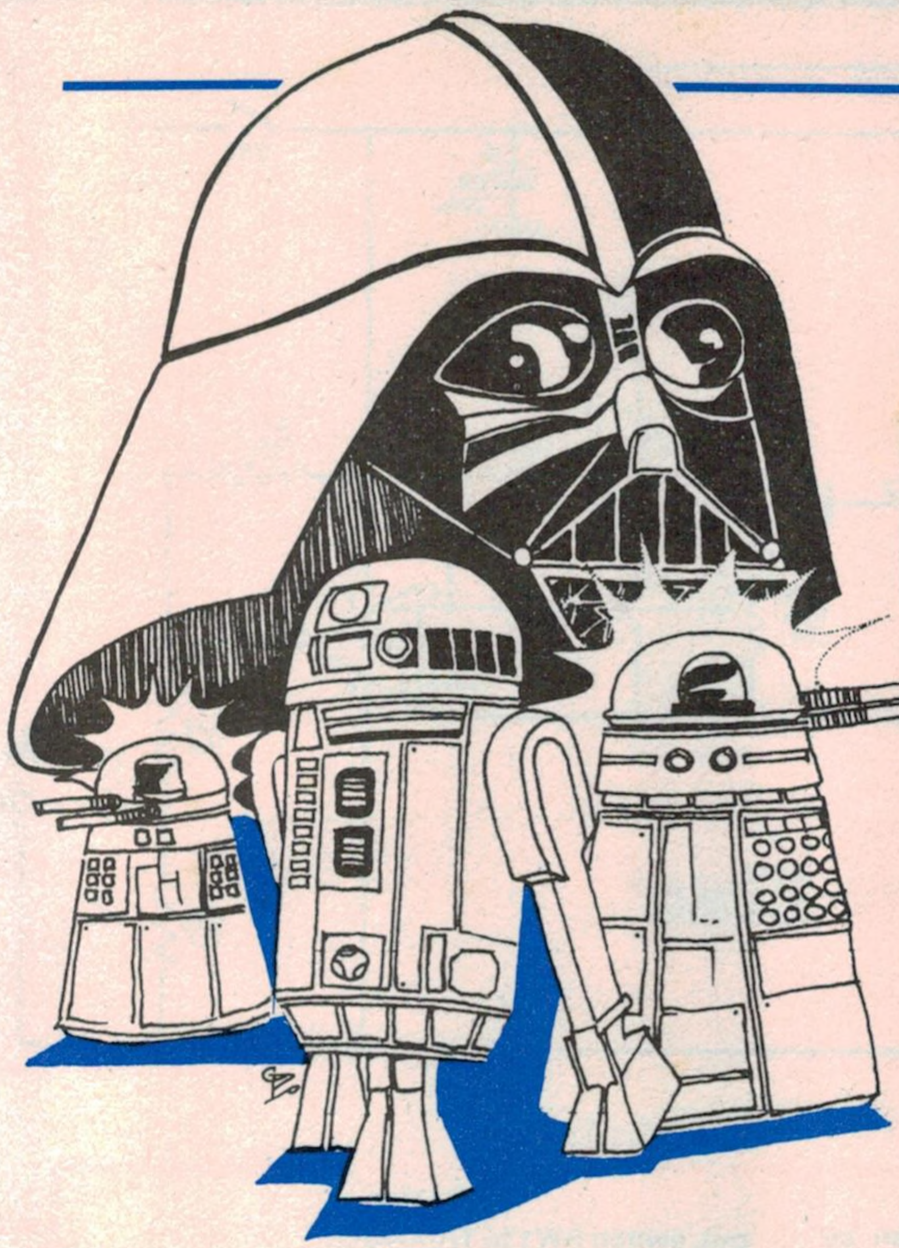

Tremolo to See-Threepio, Darth Vader to Daleks — all from our Sound Bender!

Based on a remarkably versatile function generator IC, the XR2206, this project is capable of modifying an audio signal to produce tremolo effects on music or those peculiar, metallic robot voices so abundantly found in shows like 'Dr Who', 'Star Wars', 'Star Trek', etc.

Design: **Ray Marston** Development: **Roger Harrison**

'VARIETY is the spice of life' goes a famous old saying, and when electronics entered the musical arena, engineers and musicians sought ways of extending the variety of available musical sounds, some by developing electronic 'instruments', others by developing circuits that modified the sound produced by the voice or an instrument. Deliberately introducing plain old distortion gave rise to the 'fuzz box', amplitude modulating the sound gave a 'tremolo' effect, etc.

Now, a device developed to permit more conversations per line on the telephone system was discovered to produce a range of 'intelligible', but highly modified, sounds from voice and music signals. Called variously a 'ring modulator' or 'four-quadrant multiplier', it is achieved by mixing an audio signal with an oscillator signal, and the output is the product of these two signals, containing both sum and difference frequencies. The oscillator or 'carrier' signal is reduced or suppressed. If, for example, the carrier frequency is 1 MHz and the audio signal is speech with a range of around 150 Hz to 3 kHz, the ring modulator's output would be two 'sidebands' — a 'lower' one (the difference) at 997 kHz to 999.85 kHz and an 'upper' one (the sum) at 1000.15 kHz to 1003 kHz. The 1 MHz carrier level could be 20 dB to over 40 dB lower in level than the sidebands, depending on how 'good' the ring modulator is. If the carrier is set at 1 kHz, though, the sum and difference frequencies at the output spread up and down the audio spectrum, and if speech is the input you get a jumble of voice sounds, some shifted up in frequency, some inverted and apparently shifted down in frequency. The best examples we can cite are the voices of Darth Vader from 'Star Wars', the Daleks from 'Dr Who' and the Cylons from 'Star Trek'. If the carrier is placed at a sub-audible frequency, then the result is a tremolo effect, where the audio signal is seemingly amplitude modulated at a slow rate.

The XR2206 function generator IC contains a voltage-controlled oscillator and a four-quadrant multiplier or ring modulator, so in one chip we have both the carrier oscillator and the modulator that can be combined in a circuit to produce the effects we seek. As the panel on page 40 shows, which explains the XR2206 and typical applications, the IC also includes internal control and signal shaping circuitry, making the circuit design job a whole lot simpler.

This project is designed to make full use of the functions incorporated in the XR2206 for this application, and the IC's VCO — used here as the carrier ▶

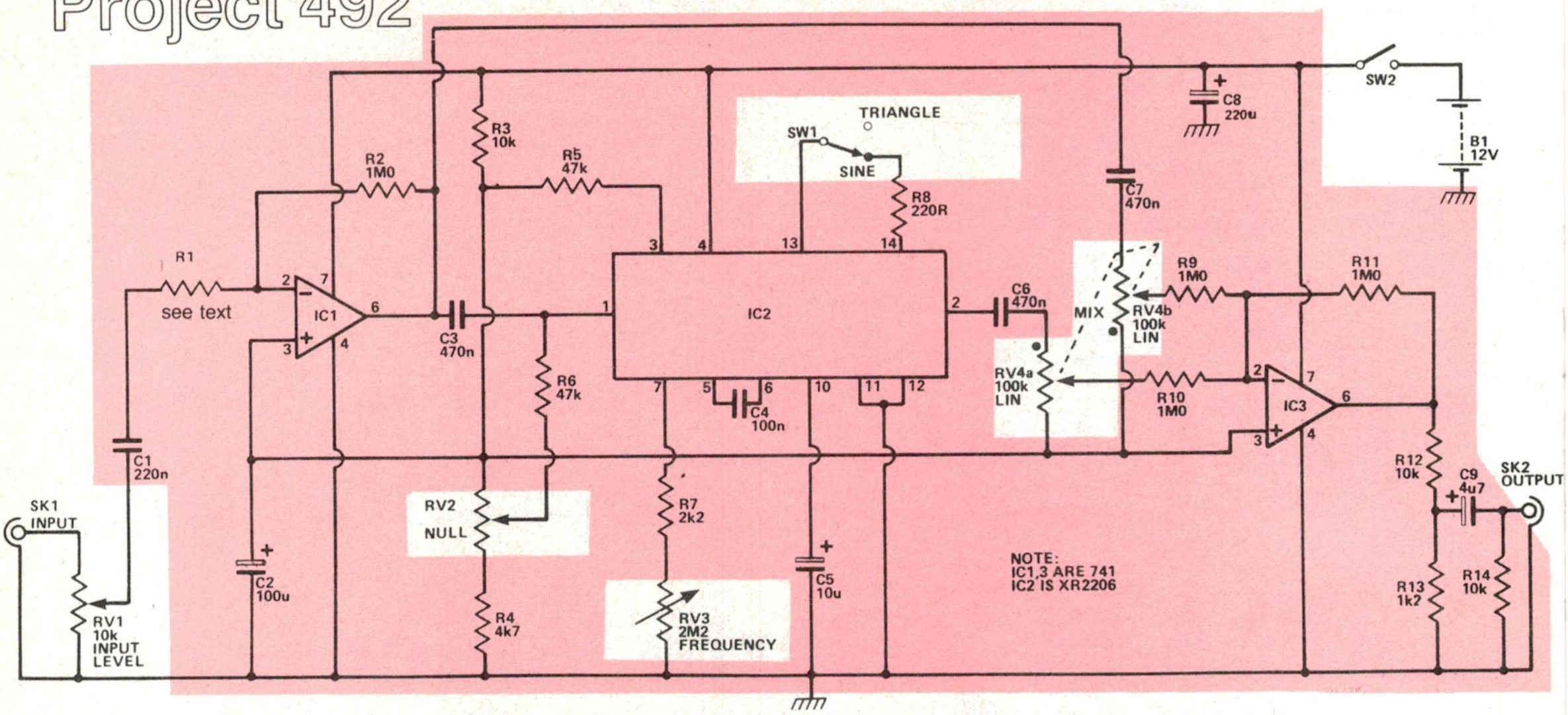

HOW IT WORKS — ETI 492

By mixing or 'multiplying' an audio signal with an oscillator or 'carrier' signal that may be varied from the sub-audible to the mid-range of the audio spectrum, the original signal may be altered in a variety of ways. Mixing an audio signal with a sub-audible carrier produces a tremolo effect — a form of amplitude modulation; mixing speech with a carrier around 1 kHz to 2 kHz produces 'robot' voices. That's just to name a few of the more familiar effects possible.

The heart of this unit is IC2, an XR2206 function generator chip that incorporates a multiplier — used to perform the modulating function — plus a voltage controlled oscillator (VCO), signal-shaping circuitry, and control circuitry that permits simple variable resistance control of the VCO. The signal-shaping circuitry permits generation of sine or triangle waveforms out of the VCO.

There are three sections to the circuit: the input amplifier (IC1), the mixer/carrier generator (IC2) and the output mixer/buffer (IC3).

The audio input signal enters via SK1 and RV1, the level control. The signal is coupled to the input op-amp IC1, which has a gain of 10 or 100 depending on the choice of value of R1. If R1 is 100k, the gain of this stage is 10, for 10k the gain is 100. The output of IC1 is coupled to the 'AM input' of IC2 and also to the input circuitry of the output buffer/mixer via C7 and RV4b.

In this application, the VCO in the XR2206 can produce either sine or triangle waveforms by means of switching a resistor in or out of circuit with SW1. A triangle waveform contains odd harmonics, which give a 'rough' or 'dirty' sound. A sinewave with little distortion has almost inaudible harmonics and thus sounds 'clean'. This is important, as we shall see shortly. The frequency of the VCO can be varied over the range from 3 Hz to about 5 kHz by means of RV3, the 'frequency' control. The frequency is determined by the values of C4, R7 and RV3. The AM input of IC2, pin 1, has a dc bias applied to it via R6, the bias voltage being determined by a divider network between the two supply rails consisting of R3, RV2 and R4. RV2 permits variation of the bias so that critical balancing of the XR2206's multiplier can be achieved to 'null out' the carrier signal (from the VCO). This 'null' control is normally adjusted to produce zero output with no audio signal input.

When an audio signal is applied, the multiplier in the XR2206 produces a *double sideband suppressed carrier* output signal. The output is taken from pin 2, via the internal buffer. Let's take a simple case to show what the multiplier does. Say the VCO is set to a frequency of 1 kHz. With the multiplier balanced there is zero output. Now, if a signal at 440 Hz ('A') is applied to pin 1 of the XR2206, the resultant output will be two frequencies: 1440 Hz and 560 Hz (the sum and the difference). Note, no trace of the carrier — this is a result of using a *balanced* mixer or multiplier. Now, say the audio input is 440 Hz (again), and the VCO is set to 5 Hz. The output will be 445 Hz and 435 Hz. Now, as every musician knows, two instruments tuned a few Hertz apart will produce a 'beat' when sounded together. The beat is perceived as an amplitude variation of the sound — if the effect is deliberately obtained, it is called 'tremolo'.

This applies for the case where the carrier is a 'pure' sinewave. If the carrier contains harmonics, then these too will produce sum and difference products when multiplied with the audio input signal and a complex output will result. Thus for a 'clean-sounding' output, switch SW1 to SINE, for a 'dirty-sounding' output, switch SW1 to TRIANGLE.

The output from the multiplier in the XR2206 is taken from pin 2 (from the internal buffer, as mentioned before). It is coupled to RV4a via C6. Now, RV4 is a dual-gang potentiometer with the 'bottom' end of RV4a connected to the 'top' end of RV4b. With RV4 at the fully anti-clockwise position, no signal from pin 2 of IC2 is coupled to the input of IC3, while the full output of IC1 is coupled to the input of IC3. With RV4 at the fully clockwise position, the full output from pin 2 of IC2 is coupled to the input of IC3, while none of the output from IC1 is coupled to the input of IC3. Thus by varying RV4 from one extreme to the other you can obtain a varying proportion of 'direct' to 'modulated' signal.

The output from IC3 is passed to SK2 first via an attenuator (R12, R13) that provides a division of 10 so that with the gain of IC1 set at 10 (R1 100k) the project has unity gain. From the attenuator the signal passes to SK2 via C9. R14 provides a dc return for the output circuit. If you wish, R13 may be omitted and R12 replaced by a link.

Capacitor C8 is a supply rail bypass, and capacitor C5 is a bypass for the internal reference of the XR2206. The non-inverting inputs of IC1 and IC3 are biased up to half the supply rail voltage by strapping them to the junction of R3 and RV2. This is done to provide a 'virtual earth' rail for these two ICs, which normally require a dual supply rail, whereas the XR2206 does not. Capacitor C2 serves as a bypass for this virtual earth rail. The multiplier direct output requires tying to the virtual earth rail also, as shown in the XR2206 application notes, and R5 does this. Note that the supply voltage can be anywhere between 9 V and 15 V. The circuit only draws a few milliamps (roughly, between 10 mA and 15 mA or so) and may be readily battery operated.

oscillator — spans a frequency range from 3 Hz to 5 kHz using a single control pot. To 'harden' or 'soften' the effect produced a 'triangle' or 'sine' oscillator waveform can be selected by a switch, and a two-channel mixer with a 'pan' control pot is incorporated on the output so that you can blend the 'direct' to 'modified' sounds to provide some control over the effect. In addition, a 'null' control has been provided as it is necessary to reduce the level of the carrier signal fed through to the output from the IC's modulator or multiplier.

The project can be operated from input levels as low as a few millivolts (e.g: microphone) or line levels of 100 mV or greater (e.g: preamp output, such as the 'effects send' on a mixer).

The Sound Bender may be powered from a supply ranging from 9 Vdc to 15 Vdc and draws typically between 10 mA and 15 mA current. A small dc plugpack would make an ideal power supply.

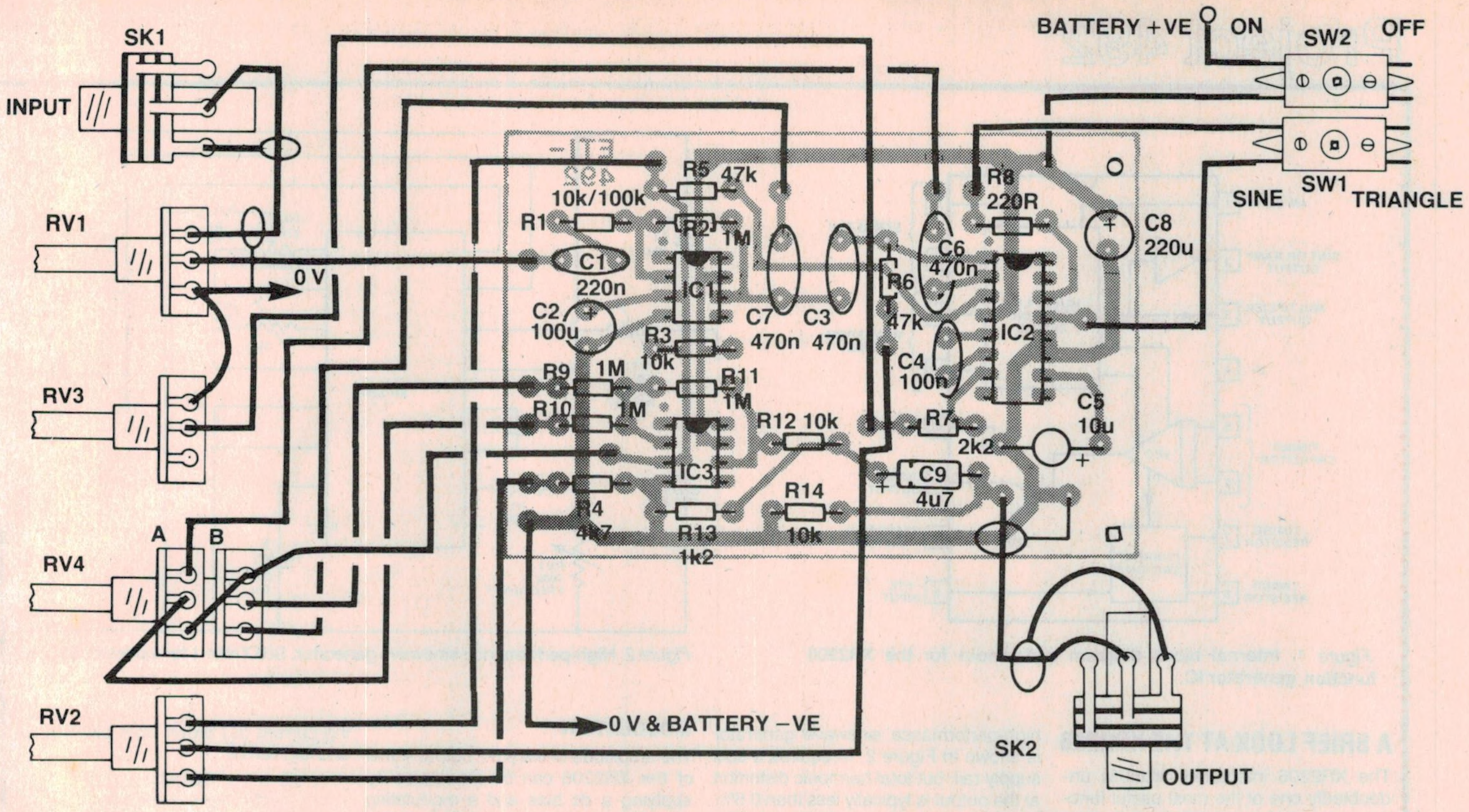

Alternatively, it may be battery operated.

Construction

We have not described details of a case, front panel, etc, as this project will undoubtedly find a wide variety of uses and we leave it to individual contructors to arrange their own housing. Fortunately, housing is not critical, providing the controls are not mounted too far from the pc board. Leads from the board to the controls should be kept as short as possible, less than 300 mm preferably, as this avoids possible feedback and hum pick-up problems. If the unit is to be mounted in other equipment, keep it away from transformers and mains leads, or thoroughly shield it, again to avoid hum pick-up.

Construction should commence with the pc board. Solder IC1 and IC3 (the two 741s) in place first, taking care that you get them the right way round. They both face in the same direction. Next, insert all the resistors and solder them in place. You'll have to decide at this stage whether you use a 10k or a 100k resistor for R1, as noted with the circuit. The XR2206, IC2, may be inserted next. As it is a CMOS IC, remove it from its packing carefully, taking care only to handle the ends of the pack, not touching the pins. Carefully insert it in the board and solder pin 4 and then 11 and 12. Then solder all the other pins. Take care not to overheat any of the ICs when soldering them in place. Now all the capacitors may be inserted and soldered in place. Watch that you get the orientation of C2, C5, C8 and C9 correct.

Now you're ready to wire up all the

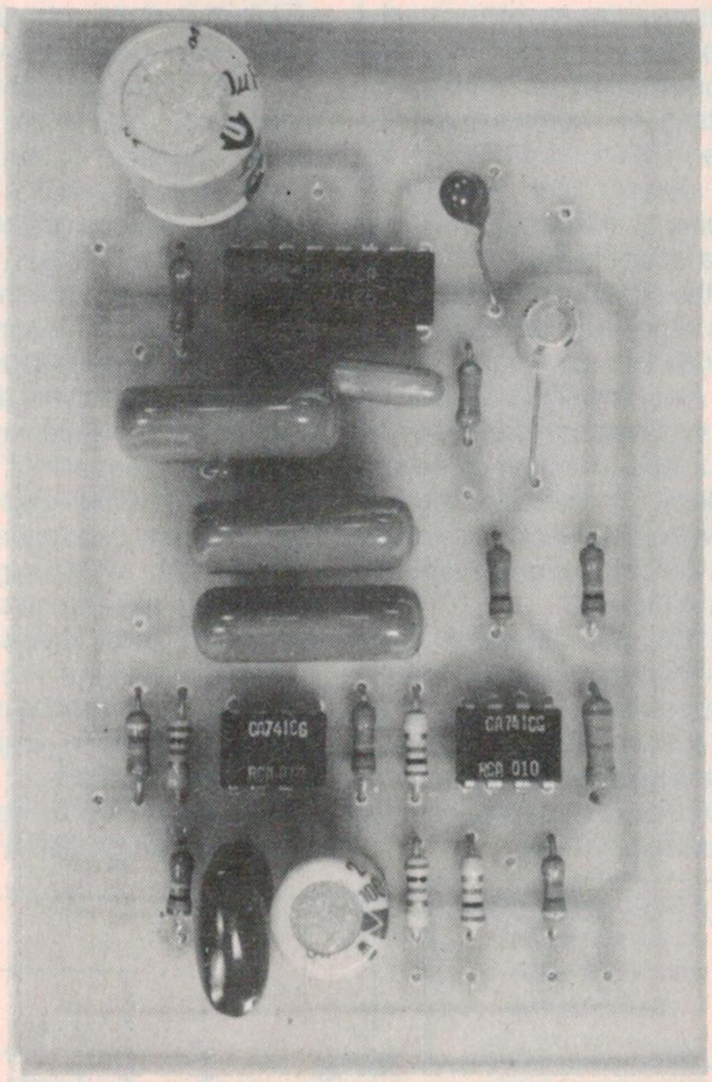

external major components. These can be mounted in any order, to suit yourself, but keep the wiring to RV1 (input level) and RV4 (mix) separated to avoid possible feedback. Use shielded cable where indicated (input and output).

Our overlay and wiring diagram gives an overall guide as to assembly and wiring of the unit.

Using it

To try out the Sound Bender, connect a supply (battery, plugpack or bench supply — what-have-you) and connect the output to the input of an audio amplifier. We pressed the ETI-453 General Purpose Amp module (April '80) into service. As we wanted to use a microphone, a 10k resistor was used for R1. Set the Sound Bender's input level to zero, set the mix control fully clockwise, and turn up the audio amp's input gain. SW1 may be set to sine or triangle, it doesn't matter. If you don't hear a whistle, rotate the frequency control until you do. Then vary the null control until you obtain minimum output. This null will be quite sharp so take it slowly. A big knob on the pot shaft or a small vernier would assist. A 10-turn pot here might seem extravagant, but some users may find it useful. ▶

PARTS LIST ETI-492

Resistors	**all ½W, 5%**
R1	100k
R2,9,10,11	1M
R3,12,14	10k
R4	4k7
R5,6	47k
R7	2k2
R8	220R
R13	1k2
RV1	10k lin.
RV2	5k lin.
RV3	2M2 lin.
RV4	100k dual lin.
Capacitors	
C1	220n greencap
C2	100u/16 V electro.
C3,6,7	470n greencap
C4	100n ceramic
C5	10u/25 V electro or tant.
C8	220u/16 V electro.
C9	4u7/16 V axial electro.
Semiconductors	
IC1,IC3	741
IC2	XR2206
Miscellaneous	

ETI-492 pc board; two SPDT miniature toggle switches, two phono sockets; case to suit; wire; knobs; nuts and bolts, etc.

Price estimate **$28 — $35**

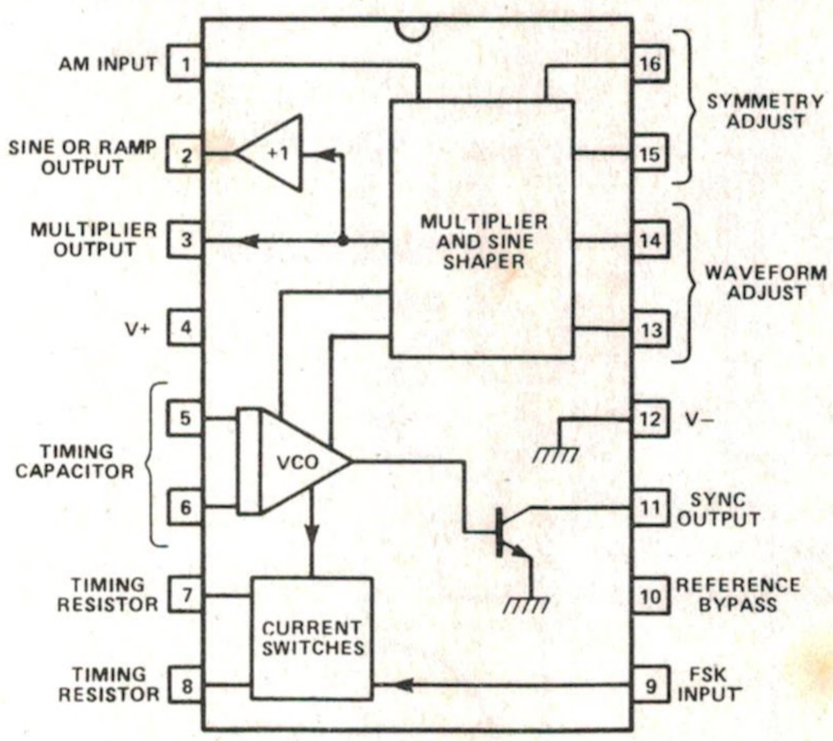

Figure 1. **Internal block diagram and pinout for the XR2206 function generator IC.**

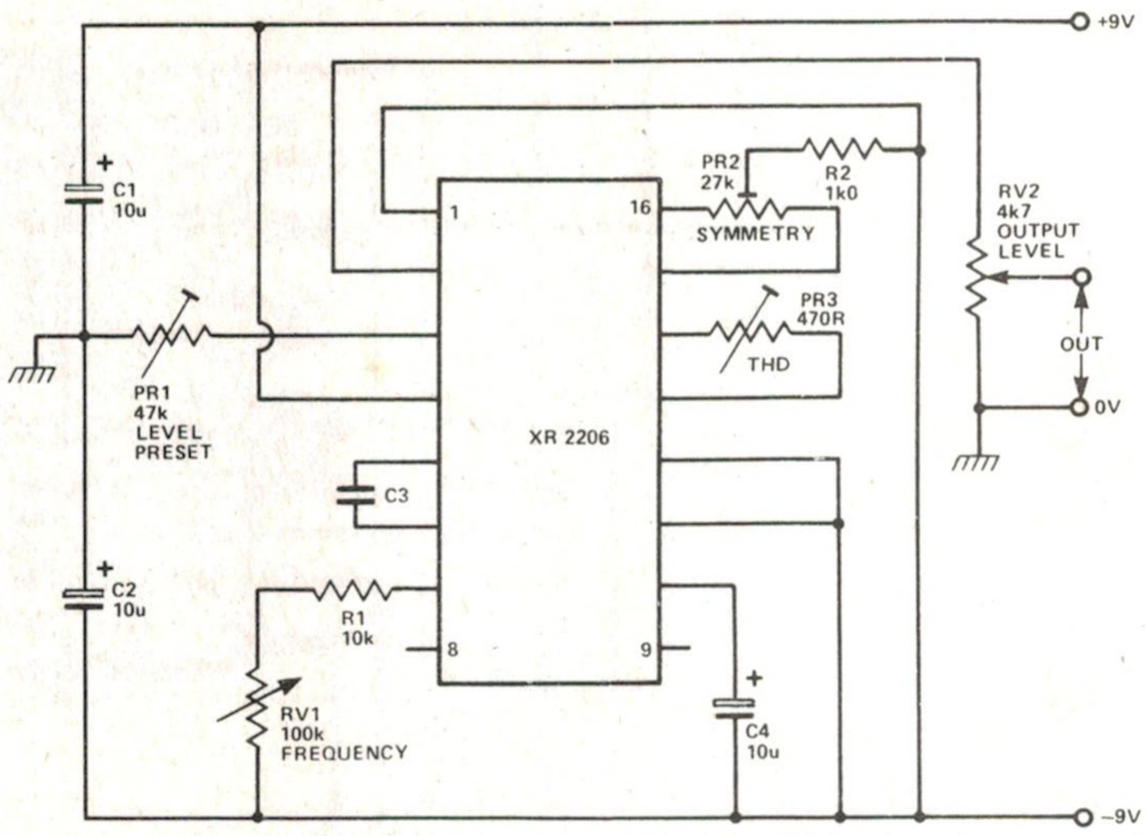

Figure 2. **High-performance sinewave generator. See Table 1 for values of C3.**

A BRIEF LOOK AT THE XR2206

The XR2206 integrated circuit is undoubtedly one of the most useful function generator or waveform generator chips available. It can generate sine, square, triangle, ramp and pulse waveforms at frequencies ranging from a fraction of a Hertz to several hundred kiloHertz, using a minimum of external circuitry. The frequency can be swept over a 2000:1 range using a single control voltage or resistance, and sinewave distortion can typically be as low as 0.5%. The chip incorporates special built-in modulation facilities that enable the generated waveforms to be subjected to AM or FM control, or to phase-shift or frequency-shift keying.

The XR2206 chip is housed in a standard 16-pin DIL package and can be powered from either single or split supplies in the range 10 to 26 V. The sinewave output of the device has maximum amplitude of about $2V_{RMS}$ and output impedance of 600R. The frequency stability of the IC is excellent, being about 20 ppm/°C for thermal changes and 0.01% V for supply voltage changes.

Figure 1 shows the pinout and internal block diagram.

WAVEFORM GENERATION

The XR2206 is a reasonably easy IC to use for basic waveform generation. A high-performance sinewave generator is shown in Figure 2. It requires a split supply rail, but total harmonic distortion at the output is typically less than 0.5%. Adjustment of trimpots PR2 and PR3 with a distortion meter connected to the output is necessary, but the THD holds over the frequency range. Trimpot PR1 requires setting for correct operation first, however. Disconnect PR3 (to obtain triangle output), then adjust PR1 until no clipping of the output waveform is visible on a 'scope hung on the output.

Note that the signal appearing on pin 3 of the IC is similar to that on pin 2, but has lower distortion and higher output impedance. Also, the signal on pin 3 is very nearly symmetrical about 0 V but that on pin 2 has an offset of several hundred millivolts. If desired, a slight dc offset may be applied to pin 3 to reduce the offset on the output signal from pin 2 — as shown in Figure 3.

The XR2206 will generate linear triangle waveforms by deleting PR3. A sine/triangle/square wave function generator is shown in Figure 4. Rise and fall times of the square wave output are typically 250 ns and 50 ns respectively, with pin 11 loaded by 10 pF.

C3	FREQUENCY RANGE
1u0	10 Hz TO 100 Hz
100n	100 Hz TO 1 kHz
10n	1 kHz TO 10 kHz
1n0	10 kHz TO 100 kHz

Table 1. Values of C3 for different frequency ranges.

MODULATION

The amplitude of the pin 2 output signal of the XR2206 can be modulated by applying a dc bias and a modulating signal to pin 1 as shown in Figure 5. The amplitude of the pin 2 signal varies linearly with the applied voltage on pin 1 when this voltage is within 4 V of the half-supply value of the circuit; in split-supply circuits, of course, the half-supply value equals 0 V. When the pin 1 voltage is reduced below the half-supply value the pin 2 signal again rises in direct proportion, but the phase of the output signal is reversed. This last-mentioned phenomenon can be used for phase-shift keyed (PSK) and suppressed carrier AM generation.

The pin 1 terminal of the IC can also be used to facilitate gate-keying or pulsing of the pin 2 output signal. This can be achieved by biasing pin 1 to near half-supply volts to give zero output at pin 2, and then imposing the gate or pulse signal on pin 1 to raise the pin 2 signal to the desired turn-on amplitude. The total dynamic range of amplitude modulation is 55 dB.

The frequency of oscillation of the XR2206 is proportional to the total timing current (I_T) drawn from pin 7 or 8, and is given by:

$$f = \frac{320 \times I_T}{C} \text{ Hz}$$

where I_T is in milliamps and C is in microfarads.

The timing terminals (pins 7 and 8) are low-impedance points and are internally biased at 3 V with respect to pin 12. The frequency varies linearly with I_T over the current range 1 uA to 3 mA. Consequently, the frequency can be voltage-controlled by applying a voltage in the range 0 to +3 V between pin 12 and the timing terminal via a suitable resistor, so that the timing current is determined by the resistor value and the *difference* between the internal (+3 V) and external (0 to 3 V) voltages. This simple technique can be used to either frequency sweep the generated signals using an externally applied sawtooth waveform, or to frequency-modulate the waveforms with an external signal.

Figure 6 shows the basic method of applying FM to the standard XR2206 circuit. Here, the external modulation signal is applied to the junction of R1-RV1 via blocking capacitor C1.

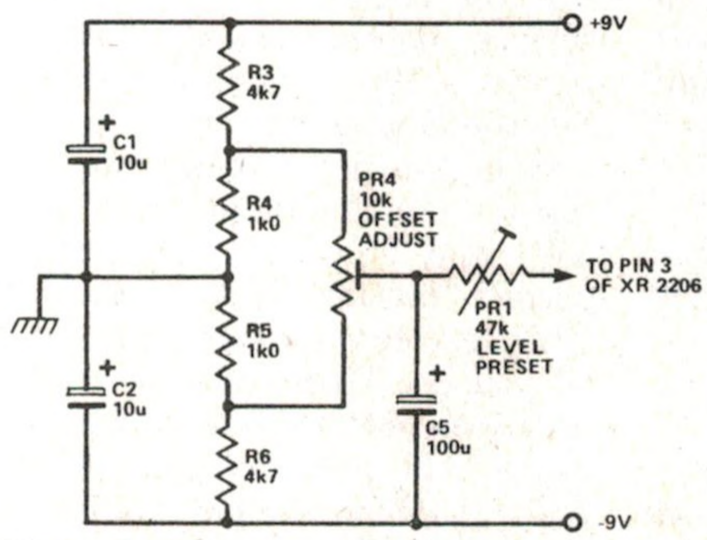

Figure 3. **Add-on modification for applying a limited dc offset for output signal dc nulling of the circuit in Figure 2.**

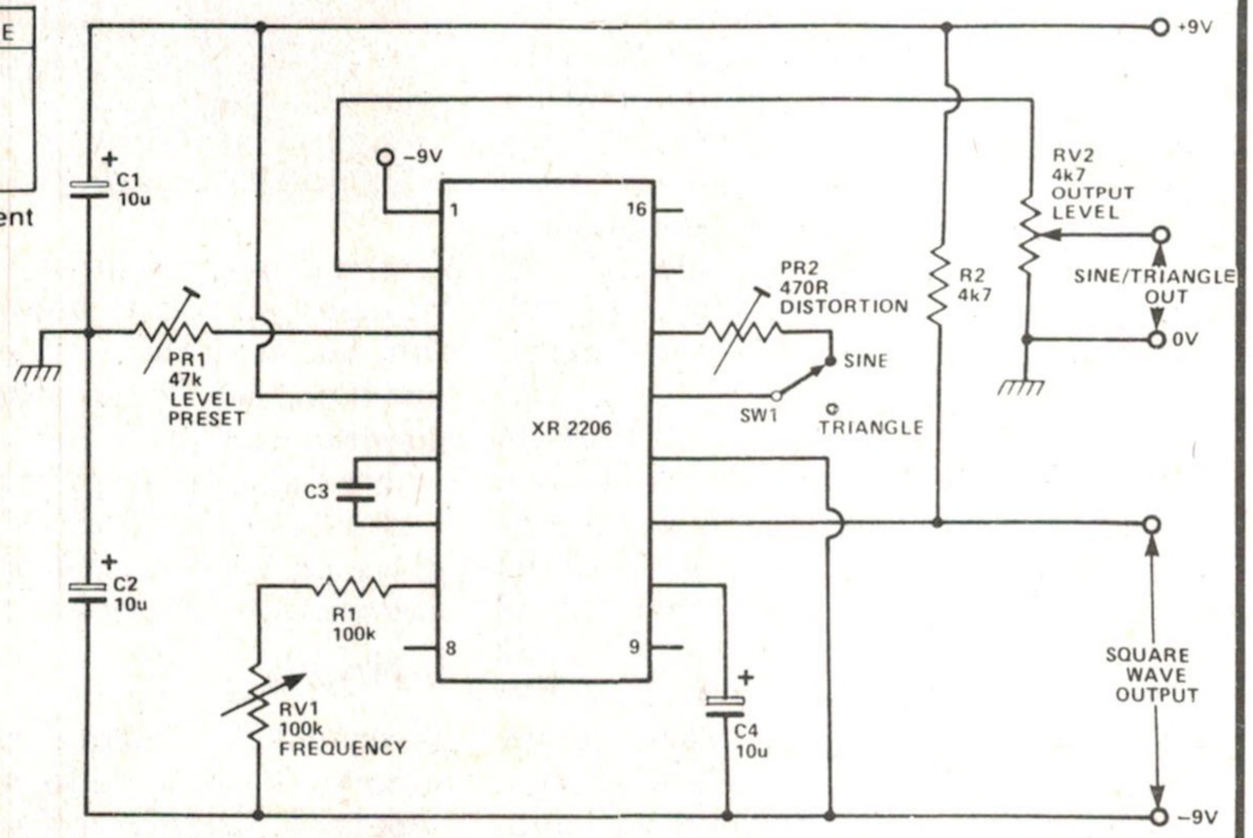

Figure 4. **Simple sine/triangle/square wave generator. See Table 1 for values of C3.**

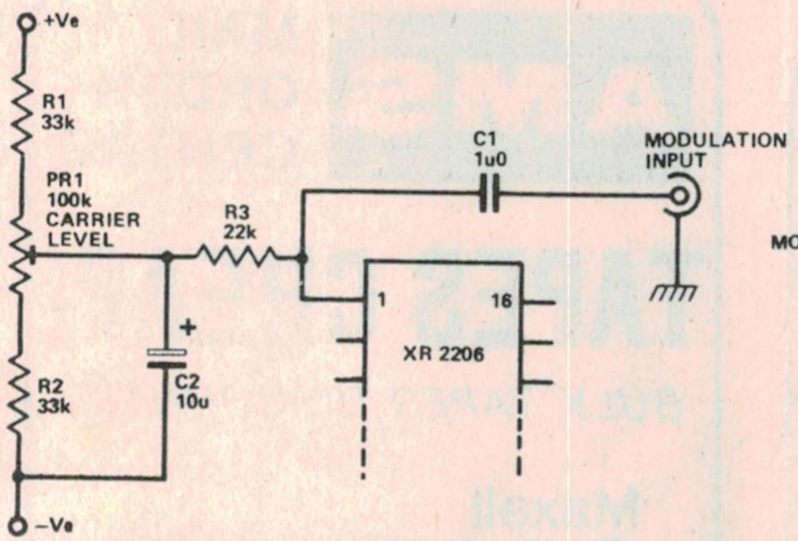

Figure 5. **How to add an amplitude modulation (AM) facility (split-supply circuit, as per Figure 2).**

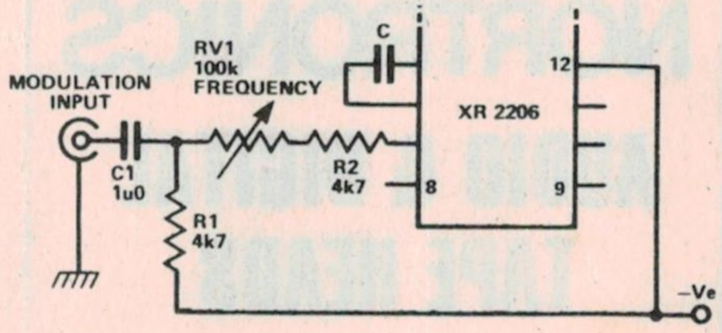

Figure 6. **How to add a frequency modulation (FM) facility (split-supply circuit, as per Figure 2).**

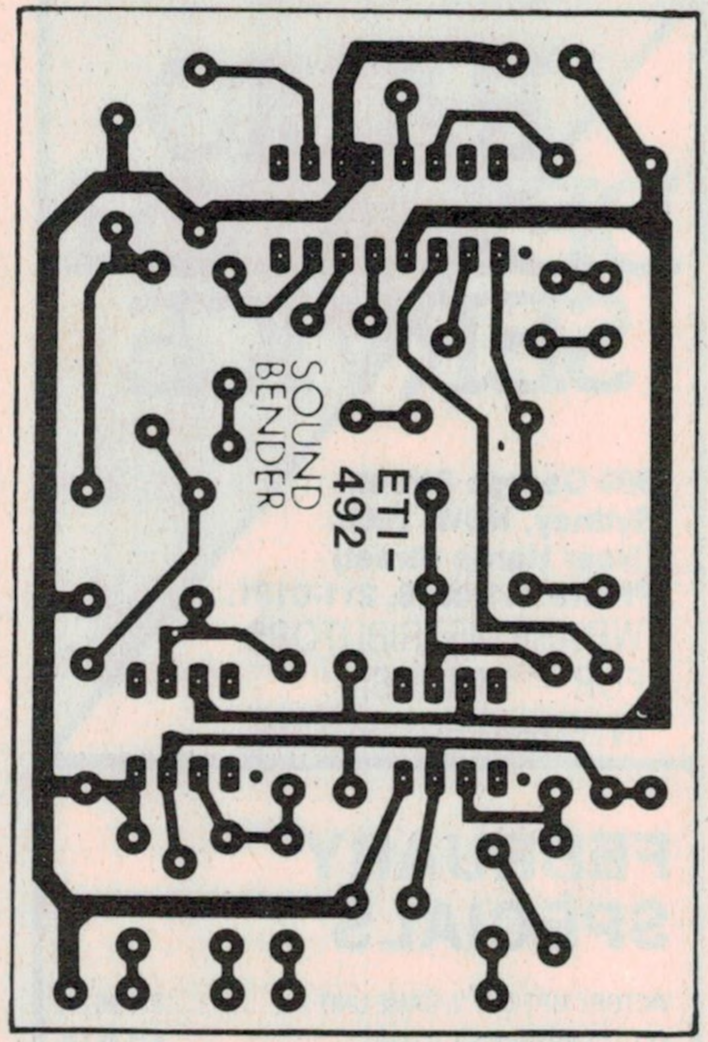

Note that the null is not perfect and there is some carrier feedthrough. However, this can be reduced and the effect-to-carrier leakage ratio improved by judicious adjustment of the mix and input level controls. Keeping the mix control somewhat back from the all-modulated end and the input level up does the trick.

Having nulled the multiplier, plug in a mike or signal source and advance the input level. Set SW1 to triangle for a 'dirty' sound. If the frequency is set to minimum (fully anti-clockwise), you will hear a tremolo effect. Setting the frequency control about two-thirds advanced you will be able to obtain 'Daleks', 'Darth Vaders', etc, with speech input. With the mix control you can 'fine tune' the effect quite well — we rarely used it fully clockwise (all modulated).

The unit performs best with a 'single signal' input — such as voice or one instrument (such as a guitar). Complex signals, such as from a band or orchestra, end up a confused jumble.

With SW1 set for a sinewave modulating signal, the effect produced is 'soft', while the effect produced when SW1 is set for a triangle wave modulating signal is 'hard'.

We noted that there seems to be some slight delay in the signal through the IC — or the modulator produces a similar effect — and the output sounds a bit 'echoey', especially when the frequency is very low, as on the tremolo effect.

Have fun with your Sound Bender! ●