Guitar Preshaper

Some upmarket bass and guitar amps are fitted with a preset tone circuit to give an instant clean modern sound without the tedious EQ setting. In this circuit IC1b filters high and low frequencies, then recombines them to produce a frequency response approximately as shown. This produces a clean bright sound for either 6-string guitar or bass.
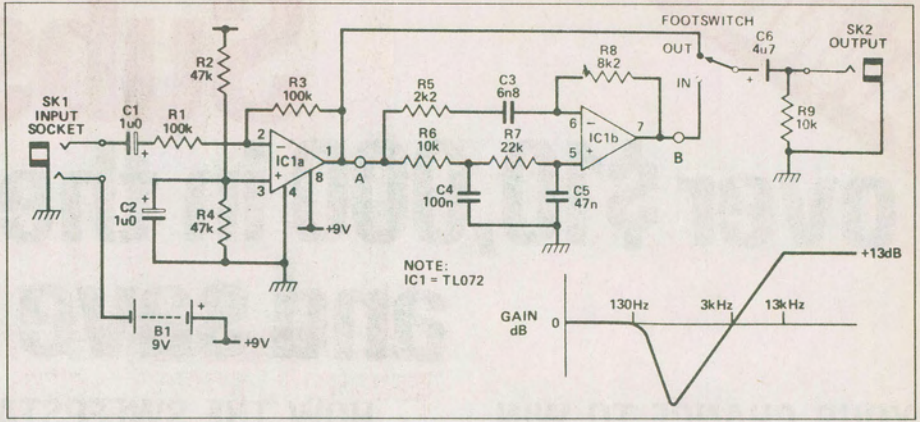
The circuit can be built as a footpedal powered from a 9V battery (no power LED is included to extend battery life).