Constructional Project

BACK TO BASICS

BART TREPAK

Part Five

Illustrating how useful circuits can be designed simply using transistors.

MINI THEREMIN

DESPITE their obvious uses in amplifying the sound of conventional acoustic musical instruments, transistors have had a great impact in terms of the actual generation of musical notes and rhythms.

This is especially true since integrated circuits (which are comprised of many transistors) were first introduced, enabling instruments such as electronic organs and synthesisers to be produced. These can produce sounds which mimic conventional instruments and are played selecting the required notes by pressing switches normally arranged as a piano keyboard.

In such instruments, each note may be generated by its own oscillator, or by a master oscillator and many divider stages to obtain the lower notes. Notes are then processed by filters and envelope shapers which tailor the waveform to produce the required sound, and fed to an amplifier and loudspeaker.

THEREMIN

One instrument that differs radically from keyboard instruments is the Theremin, named after its inventor Leon Theremin. A Theremin produces the notes in a completely different way and does not even require the musician to touch the instrument to play it!

All the notes are produced using the interaction of just two oscillators and the instrument can only play one note at a time. As well as the standard musical tones, all other frequencies in between can also be produced, gliding between them in response to hand movements.

This provides some interesting sounds but also makes the instrument quite difficult to play. This is even more true of the simplified version described here – professional Theremins also have a control enabling the signal to be muted by the performer so that the notes do not have to glide from one pitch to the next.

BEAT FREQUENCY

The operation of a Theremin is based on two high frequency tuned circuit oscillators running at almost identical frequencies. This type of oscillator was discussed in the *Metal Detector* project in Part Two of this series (March '03).

Referring to the circuit diagram shown in Fig.30, the oscillators are based around transistors TR1 and TR2. Note that in this case, however, the two oscillators use an inductive tap to generate the feedback, which is applied to the transistor bases via capacitors C1 and C3.

The first oscillator frequency is variable and the second is fixed. The frequency of oscillation depends on the values of the inductors and their tuning capacitors C2 and C4. In the case of the variable oscillator around TR1, it is also governed by the additional capacitance of the player's hand close to a metal plate or aerial. The inductance values are adjustable so that the frequencies of both oscillators can be tuned as required.

As the hand is moved closer to the plate, this capacitance increases causing a corresponding decrease in the frequency of the oscillator. The changes in capacitance are minute, however, resulting in only very small changes in frequency.

MIXED SOUNDS

The outputs of two oscillators are mixed, resulting in both sum and difference frequencies. If the two basic frequencies are close enough, the resultant beat frequencies will be in the audio range. The interesting thing is that although the original frequencies are high and well above the audio range, a small change in one of them produces a large change in the audio beat frequency producing a very sensitive instrument with a wide pitch range.

The outputs from the oscillators are coupled by resistors R3 and R4 to capacitor C5 and into the mixer stage around TR3.

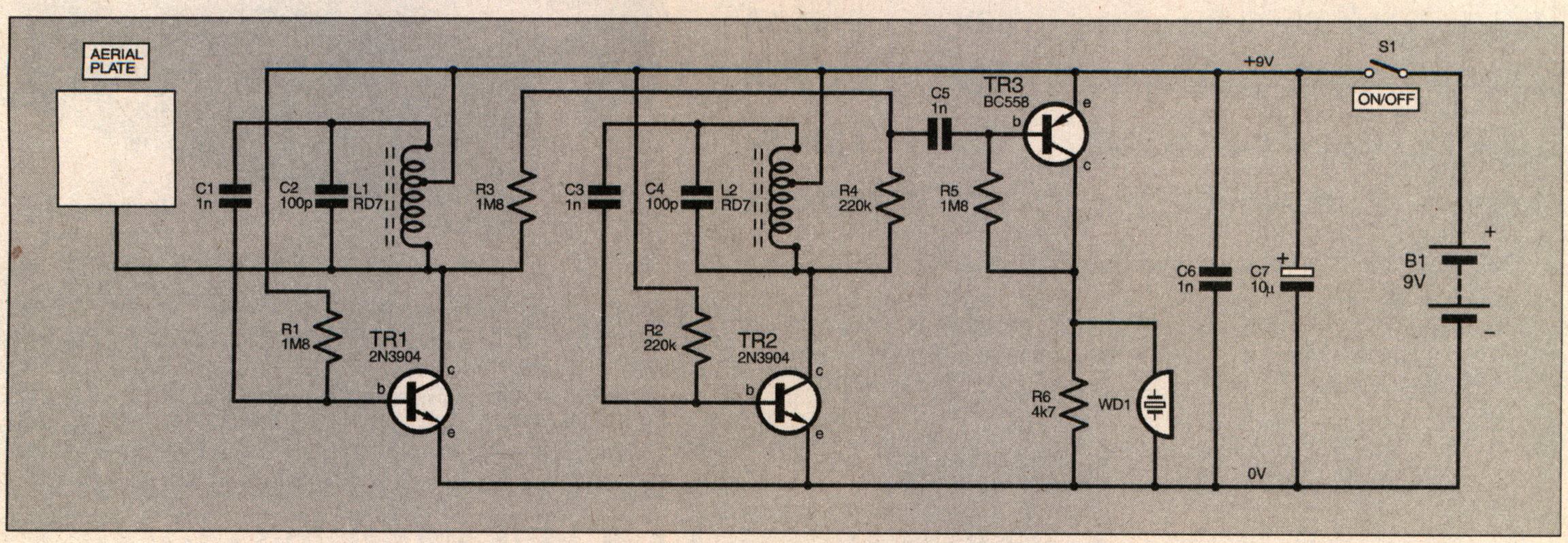

Fig.30. Complete circuit diagram for the Mini Theremin.

COMPONENTS

Resistors

R1, R3, R5	1M8 (3 off)
R2, R4	220k (2 off)
R6	4k7

All 0·25W 5% carbon film

See SHOP TALK page

Capacitors

C1, C3, C5, C6	1n disc ceramic, 2·5mm pitch (4 off)
C2, C4	100p disc ceramic, 2·5mm pitch (2 off)
C7	10μ radial elect. 16V

Semiconductors

TR1, TR2	2N3904 *npn* transistor (2 off)
TR3	BC558 *pnp* transistor

Miscellaneous

L1, L2	Toko RD7 inductor (2 off)
S1	s.p.s.t. min. toggle switch
WD1	piezo sounder

Stripboard, 19 holes x 8 strips; PP3 battery and clip; plastic case to suit; copper-clad p.c.b. laminate or aluminium place, approx. 40mm x 50mm (see text); connecting wire; solder, etc.

Approx. Cost Guidance Only **£6** *excl. case & batt.*

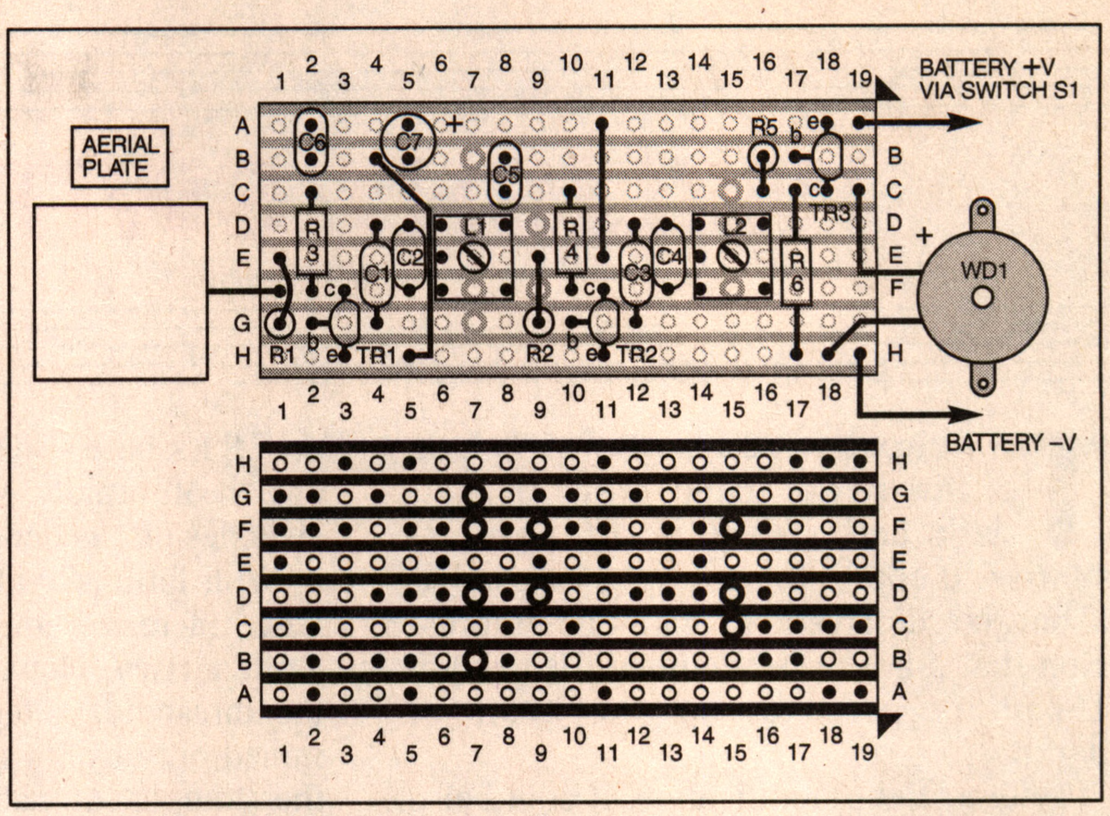

Fig.31. Stripboard component layout, interwiring and details of breaks required in the underside copper tracks.

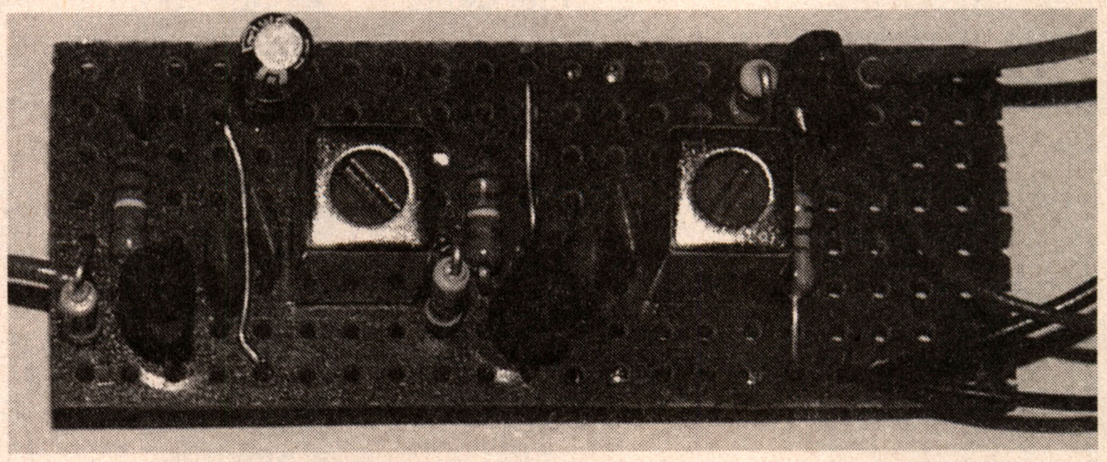

Component layout on the completed circuit board.

The resistors have relatively high values to prevent the oscillators from interacting undesirably and locking together. The mixer also amplifies the resultant frequencies and drives the piezo transducer WD1.

Frequencies above the audio range are largely attenuated by the capacitance of the transducer, leaving only the audio tone beat frequency. However, if the output is to be connected to an external amplifier in place of WD1, a 2200pF capacitor should be connected in parallel with resistor R6 as the signal could otherwise cause interference in radio equipment.

The circuit is powered by a 9V battery, supplied via switch S1. Capacitors C6 and C7 are included to ensure a low impedance supply at both low and high frequencies. The current consumption is about 1mA.

CONSTRUCTION

The complete circuit is built on a small piece of stripboard having 19 holes × 8 strips, as shown in Fig.31. Before starting construction, the tracks should be cut in the places indicated using a 2·5mm drill, or the special tool available for this.

Two wire links are also required and these can be made from discarded component leads. As with all projects in this series, the layout applies to the specified transistors and if substitutes are used, care should be taken as pinouts may differ.

Inductors L1 and L2 are small i.f. (intermediate frequency) transformers normally used in radio receivers and the types specified do not have integral capacitors. The cans have solder lugs enabling these to be soldered to fix them, although in this application the lugs do not fit into the pitch of the stripboard so they are simply bent up underneath the component before it is mounted.

WD1 is a piezo sounder (not to be confused with a piezo buzzer which contains an integral drive circuit) and this may be connected either way around.

The "tuning" plate should consist of a small piece of aluminium or copper-clad p.c.b. laminate, measuring about 40mm × 50mm, connected to the circuit by a short wire. Alternatively, this can take the form of a short aerial 10cm to 15cm long connected to the same point on the circuit.

If the unit is to be mounted in a box, a plastic case with a battery compartment would be most suitable.

TUNING

When finished, the circuit must be tuned for correct operation by adjusting the inductor cores so that both oscillators are working at around the same frequency. Only use a plastic blade for adjusting the cores – a metal tool could damage them.

It is best to set one core to about its mid-position and adjust the other until a whistle is heard from the sounder. Bringing your hand near the sensor plate will then result in a lower pitch sound. Alternatively the circuit may be adjusted beyond this point so that the frequency rises as your hand approaches the sensor.

Apart from its undoubted(?) musical applications, the unit could find uses as a rudimentary proximity alarm to detect the presence of people or animals, although the stability of this simple circuit is not ideal for such applications.

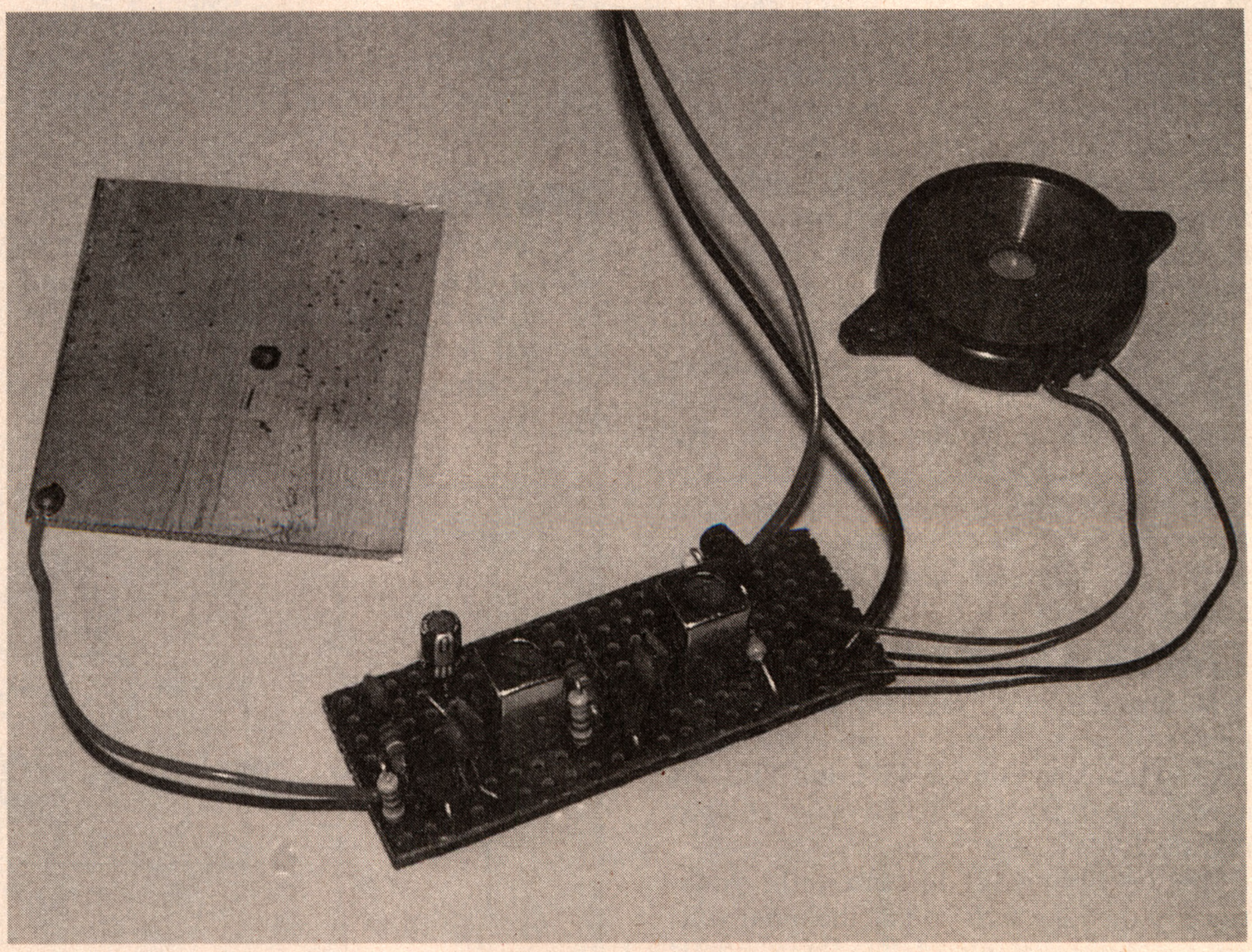

Finished Mini Theremin showing wiring to the "tuning" plate and piezoelectric sounder. The tuning plate is an off-cut from a piece of copper-clad board.