EM Stereo Spreader

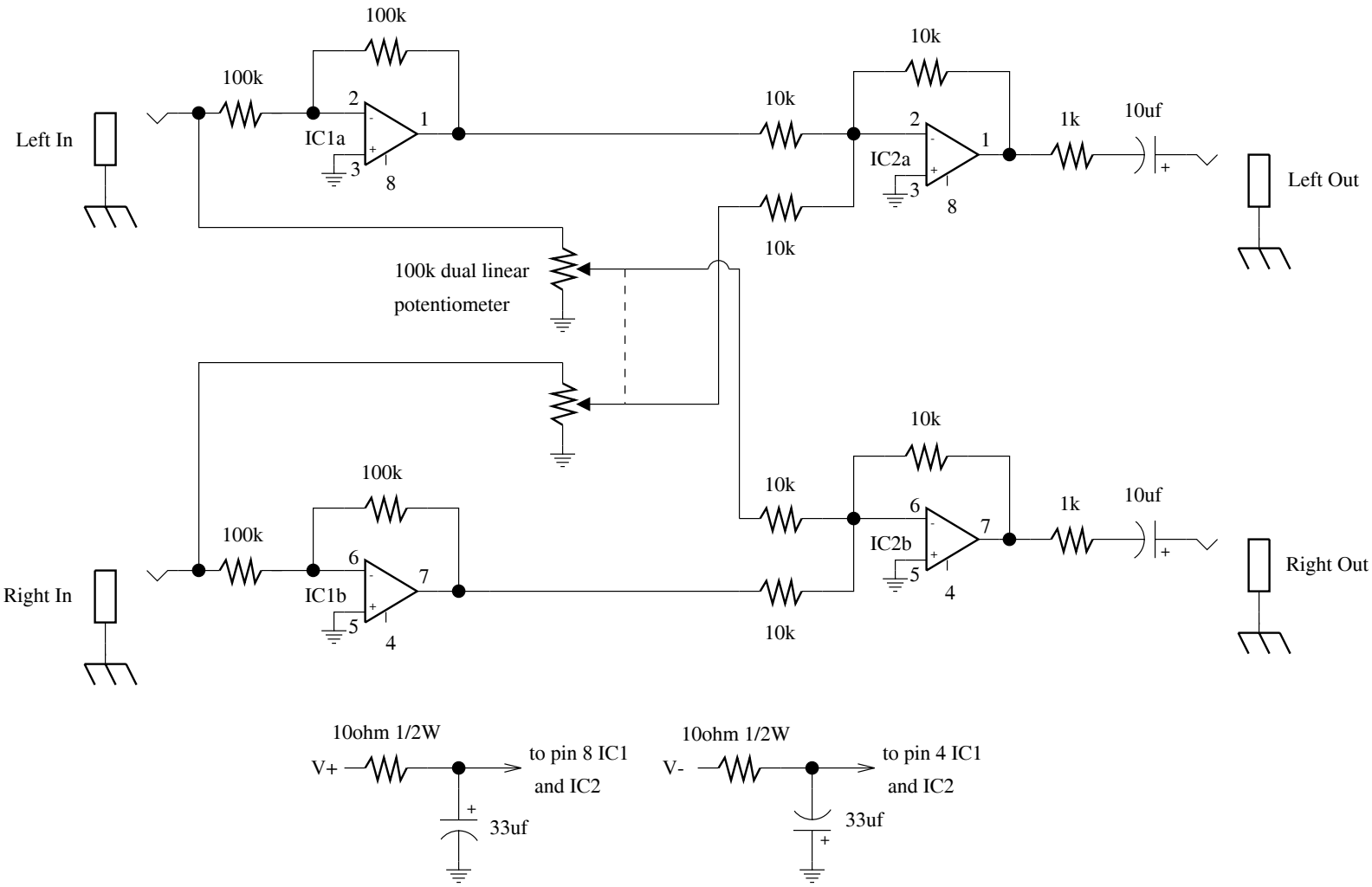

IC1 & IC2 are 5532 Dual Op amps for low noise. All resistors are 1% metal film 1/4W unless otherwise noted. Requires bipolar power supply from 9 to 15 volts.