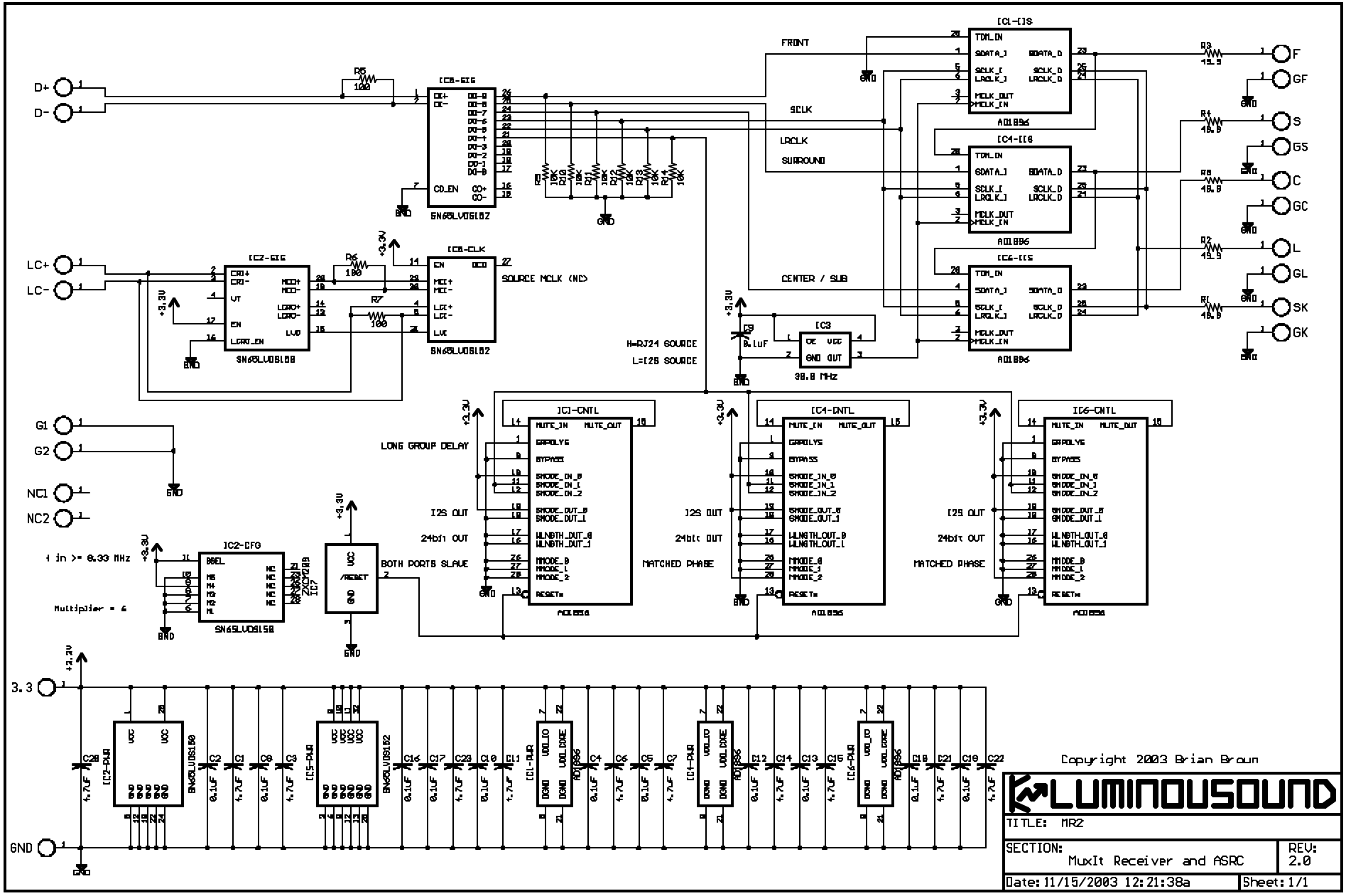
D+
D-
LC+
LC-
G1
G2
NC1
NC2
3.3
GND
FRONT
SCLK
LRCLK
SURROUND
CENTER / SUB
F
GF
S
GS
C
GC
L
GL
SK
GK
SOURCE MCLK (NC)
H=RJ24 SOURCE
L=I2S SOURCE
LONG GROUP DELAY
I2S OUT
24bit OUT
MATCHED PHASE
BOTH PORTS SLAVE
Multiplier = 6
38.8 MHz
Copyright 2003 Brian Braun
LUMINOUSOUND
TITLE: MR2
SECTION: MuxIt Receiver and ASRC
REV: 2.0
Date: 11/15/2003 12:21:38a
Sheet: 1/1