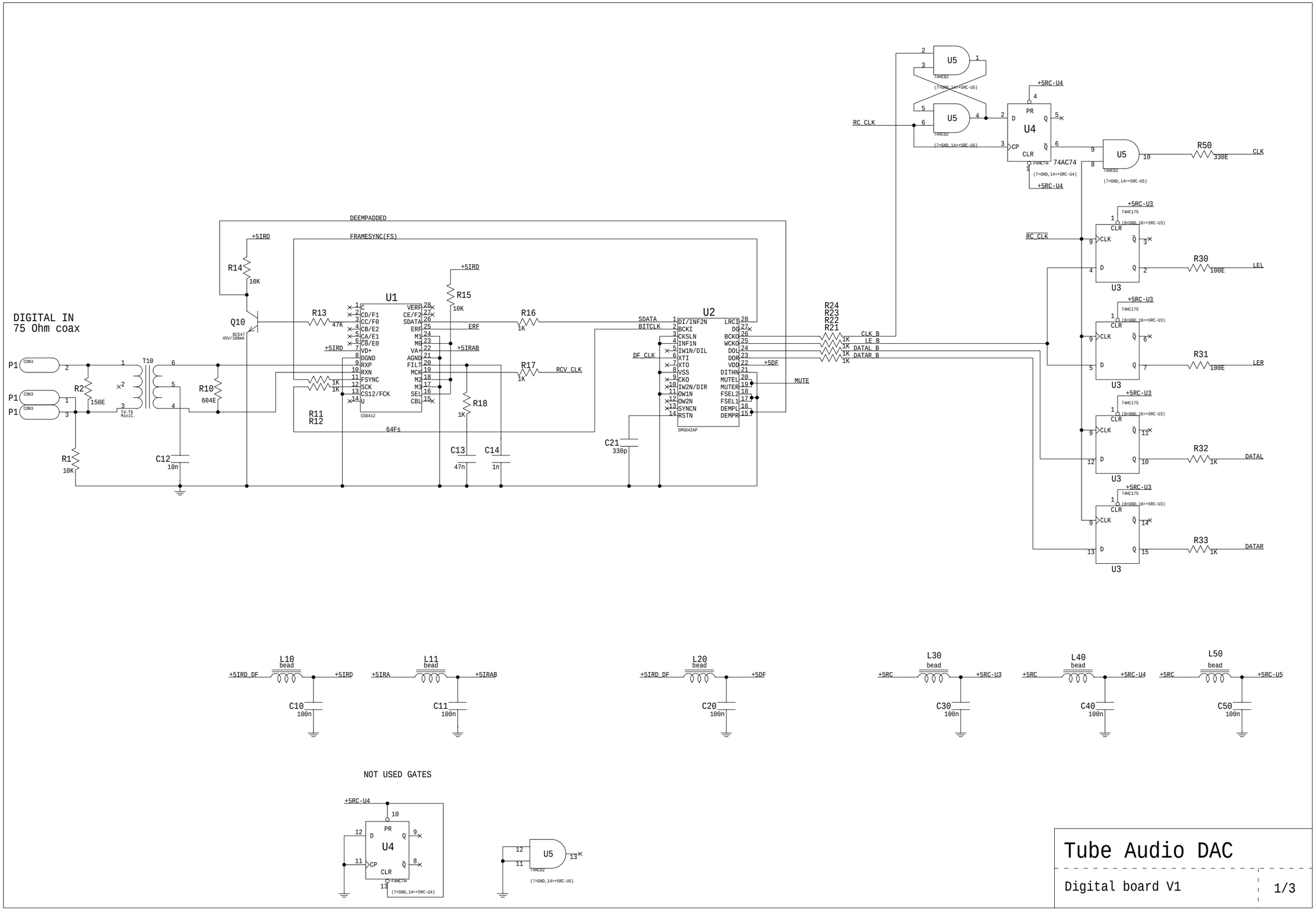

Tube Audio DAC

Digital board V1

1/3