Analog multiplication or amplitude modulation are provided by a single MOSFET

A single n-channel, dual-gate MOSFET can be made to perform analog multiplication if one of the gates is used to vary the device's transconductance and the other is used for signal input. The resulting drain-current variation can be expressed as the sum of two terms—one proportional to the signal and control voltage. Removal of the signal term by subtraction of a portion of the input signal leaves just the product term.

As shown in Fig. 1, the input signal, V_s, is fed to gate G_1, while the control signal, V_c, goes to gate G_2. If $V_c >> V_s$, then the drain voltage can be expressed by

$$V_o = -(k_1 + k_2 V_c)\, R_1 V_s.$$

The expression in the parenthesis is the small-signal MOSFET transconductance, g_m, and R_1 is the drain-load resistor. Values for k_1 and k_2 are computed for MOSFET operation in the depletion region—that is with both gates reverse-biased. Under this condition the drain current, I_D, can be expressed by

$$I_D = I_{DSS}\,(1 - V_{GS}/V_p)^2.$$

I_{DSS} and V_p are the short-circuit drain current and pinch off voltage, respectively. The transconductance is defined as the partial derivative of I_D with respect to V_{GS}. It is found to be

$$g_m = \frac{2I_{DSS}}{-V_p} + \frac{2I_{DSS}V_c}{V_p^2}$$

where, for this circuit, $V_{GS} = V_c$. Equating k_1 and k_2 with the previous equation, we find that

$$k_1 = \frac{2I_{DSS}}{-V_p}\,.$$

$$k_2 = \frac{2I_{DSS}}{V_p^2}\,.$$

Multiplication of the terms in Eq. 1 gives the output voltages as

$$V_o = -(k_1R_1)\,V_s - (k_2R_1)\,V_cV_s.$$

In the circuit shown, amplifier A_1 sums V_o and V_s so as to cancel the first term and leave

$$V_{out} = -(R_f/R_{s1})\,(k_2R_1)\,V_cV_s,$$

provided that

$$-(R_f/R_{s2})\,V_s + (R_f/R_{s1})\,(k_1R_1)\,V_s = 0.$$

With $I_{DSS} = 4$ mA and $V_p = -1.5$ V, V_s and V_c are restricted to voltage swings of 0.3 and 1 V, respectively, to avoid saturation or pinch-off. For these operating conditions, $k_1 = 5.32$ mA/V and $k_2 = 3.56$ mA/V^2. Since $R_f = R_{s1}$, and R_{s2} is adjusted to cancel the V_s term, $V_{out} = 8.9\,V_cV_s$.

In practice, the highest operating frequency is restricted to 100 kHz by the low-frequency response of the op amp. If required, amplitude modulation can be obtained by omitting R_{s2}. However, without filtering, the modulation depth is limited to 60%. Above this V_c and V_s are of the same order of magnitude, causing the transconductance to be a function of both signals with consequent generation of spurious harmonics.

Dr. W. V. Subbaro, Assistant Professor, North Dakota State University, College of Engineering and Architecture, Fargo, N.D. 58102.

CIRCLE NO. 312

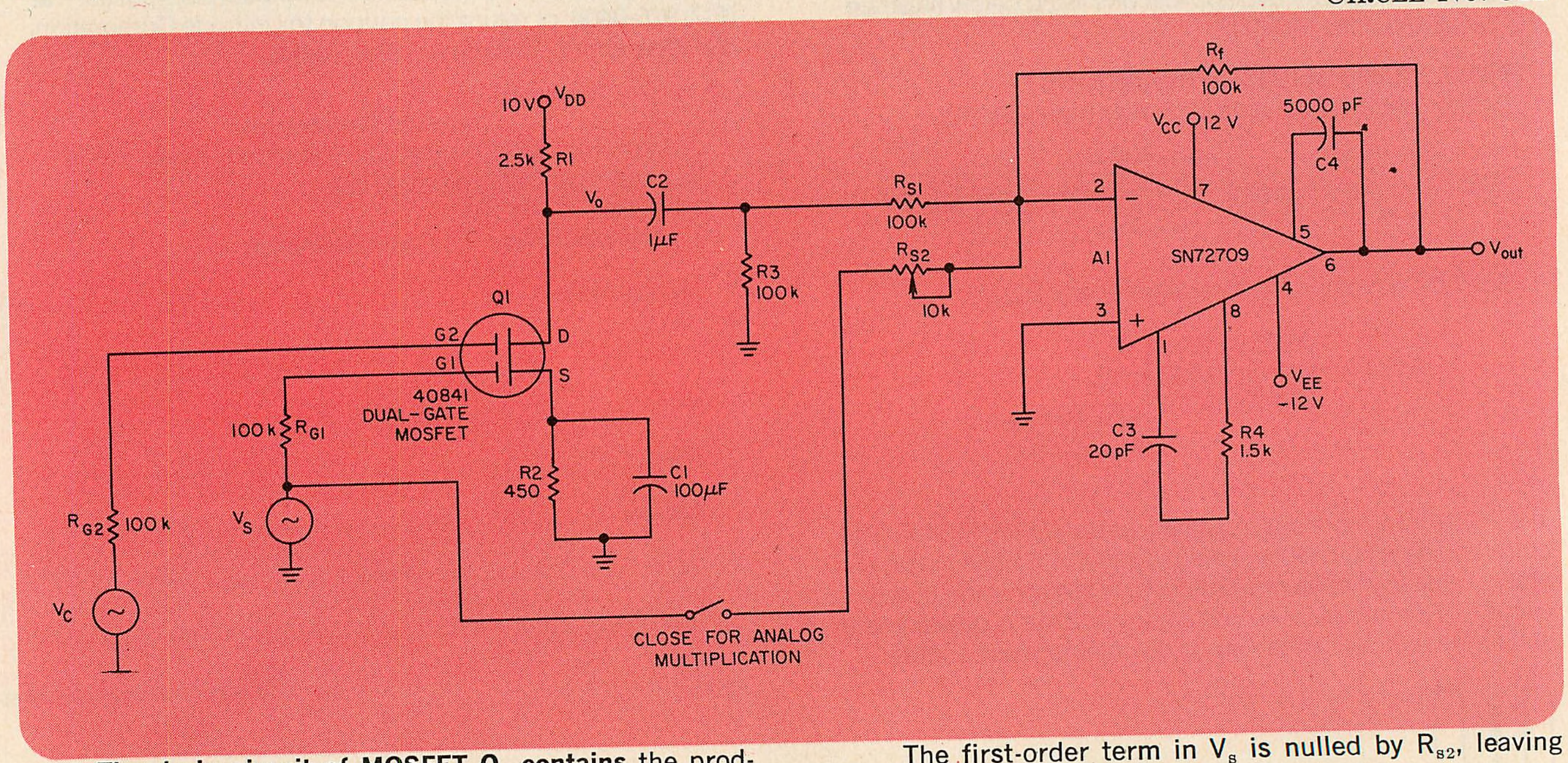

The drain circuit of MOSFET Q_1 contains the product of signal voltage V_s and control voltage V_c. The first-order term in V_s is nulled by R_{s2}, leaving only the product term at the output.