Construction Project:

LOW COST ULTRASONIC 'RADAR'

This simple unit sounds a buzzer and operates a relay when there's an object a preset distance away. The distance can be adjusted to anywhere between 200mm and over three metres. It uses an ultrasonic transmitter and receiver, two ICs and fits into a small plastic box.

by PETER PHILLIPS

Having a device that beeps when something is within its range has many uses — but it has even more uses if you can adjust the sensing distance between the device and the object being detected. Obvious applications include an aid for the sight-impaired, as a warning device when someone approaches a danger zone, or an alarm or buzzer to indicate when someone enters a door. For those trying to break the 'park by feel' habit, it can be used as a parking aid in a car.

It can also be used as a sensor in a burglar alarm. Because the detector triggers only when there's an actual object within range, it is less prone to false triggering than many other types of detectors.

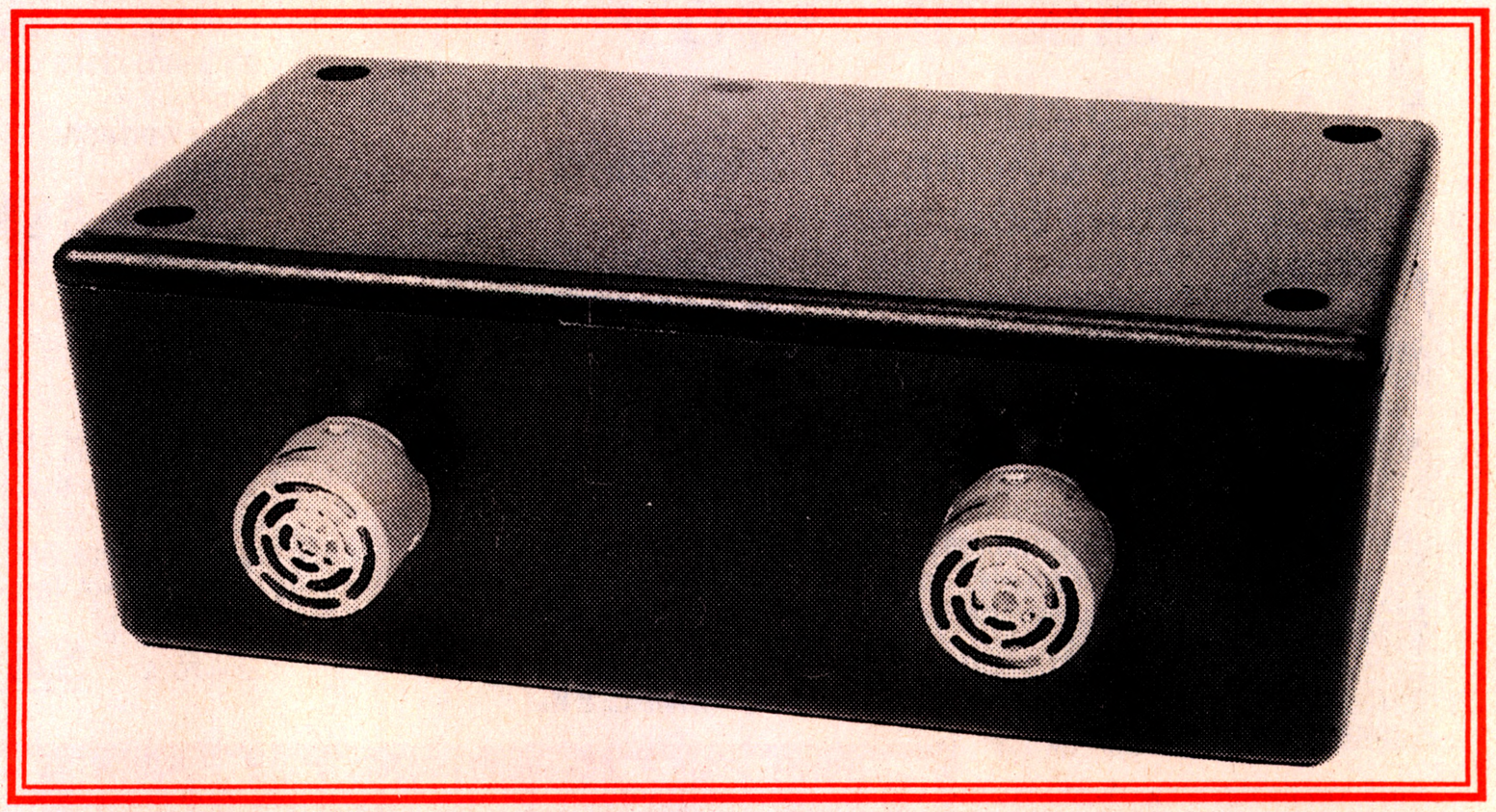

The sensing range is from 200mm to over three metres, adjustable using a preset pot on the circuit board. For instance, if the range is set to say 500mm, an object outside this range will not be detected. Once the distance is reduced to 500mm, the unit will sound a buzzer and close a relay. If the object moves closer to the sensors, the buzzer will continue to sound and the relay will stay on.

This project, developed by Conrad Marder from Oatley Electronics, uses a 40kHz ultrasonic transmitter and receiver, and an LM567 tone decoder IC. The rest of the electronics is to drive a relay and sound a buzzer when an object is within range. It's simple and cheap to build and a kit of parts is available from Oatley Electronics, as explained at the end of the article.

How it works

The principle of operation is rather like a radar set, hence the name of the device. However, while radar uses microwaves, this one works with ultrasonic sound, which is sound with a frequency above normal hearing. In this case, the frequency is 40kHz, and the transmitter and receiving devices are designed to operate at exactly this frequency.

Both devices are made of a piece of piezo ceramic material, shaped to resonate at 40kHz. The transmitter therefore produces its highest output for a signal of 40kHz, and the receiver is most sensitive to a 40kHz sound signal.

The transmitter sends out a 40kHz tone, and the receiver picks up this signal after it's bounced off a distant object. Because ultrasonic waves travel at the speed of sound (about 340m/s), the time between sending a signal and receiving its reflection is a measure of the distance between the transmitter and the object causing the reflection.

If the ultrasonic sound is bounced off an object one metre away, the reflected signal will be received about three milliseconds later. However, the signal at the receiver will contain reflections from surfaces more than a metre away, so the circuit has to be sensitive to reflections occurring no later than three milliseconds after the original transmission.

This is achieved by sending *pulses* or bursts of 40kHz sound, rather than a continuous tone. Each burst of 40kHz is sent for about 1ms, with a delay of 30ms between each burst. If a reflected burst of signal is received within the time allowed, the sensing circuit responds. Reflections outside the preset time are ignored.

This sounds complex, but with the

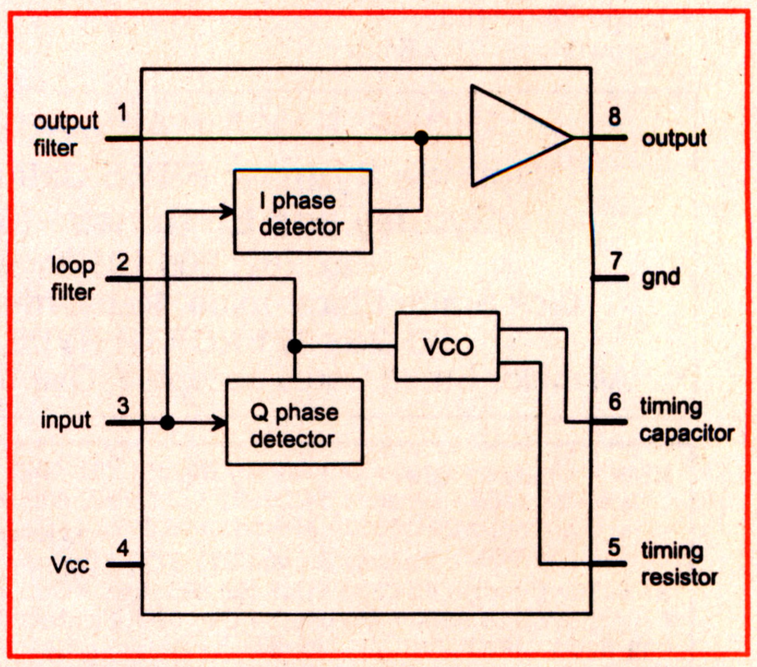

Fig.1: The block diagram of the LM567 tone decoder IC. The output at pin 8 goes low when the input signal is within the passband of the IC.

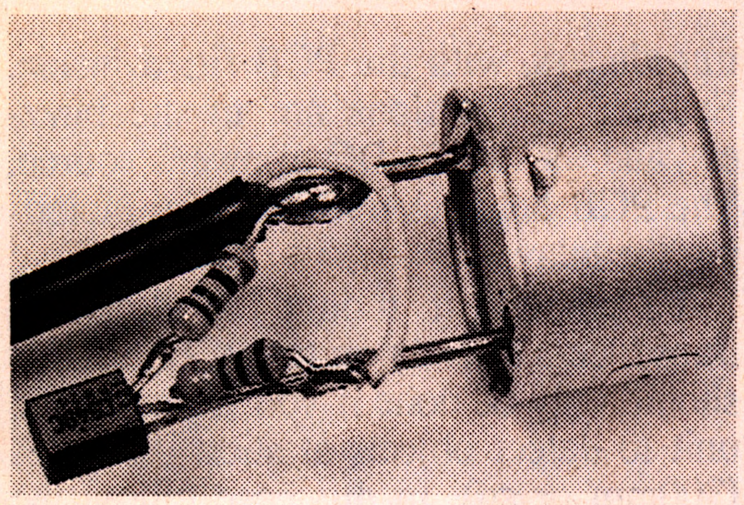

Here's how the amplifier components are mounted on the receiver transducer in the prototype. The component leads should be as short as possible.

right IC it can be done with a few parts, as you'll see.

The circuit

The main device in this circuit is IC1, an LM567 tone decoder IC. The block diagram of this 8-pin IC is shown in Fig.1. It's described as a general purpose tone decoder designed to send its output low when an input signal within the passband is present.

It contains an I and a Q phase detector, driven by a voltage controlled oscillator (VCO) that determines the centre frequency of the decoder. External components are used to independently set the centre frequency, bandwidth and output delay.

In the circuit diagram of the project (Fig.2), capacitors C5 and C6 are filter components, and the internal oscillator frequency is determined by the values of C2, R5 and VR1. The 40kHz oscillator output is taken from pin 5.

The circuit around IC2b is an oscillator to gate the 40kHz signal at the input of IC2a. The gating is achieved by D6 and the result is a 1ms burst of 40kHz every 30ms or so. As the waveforms on the circuit diagram show, the 40kHz signal is gated to the transmitter when the gating oscillator is high.

The received signal contains two components: the original transmission

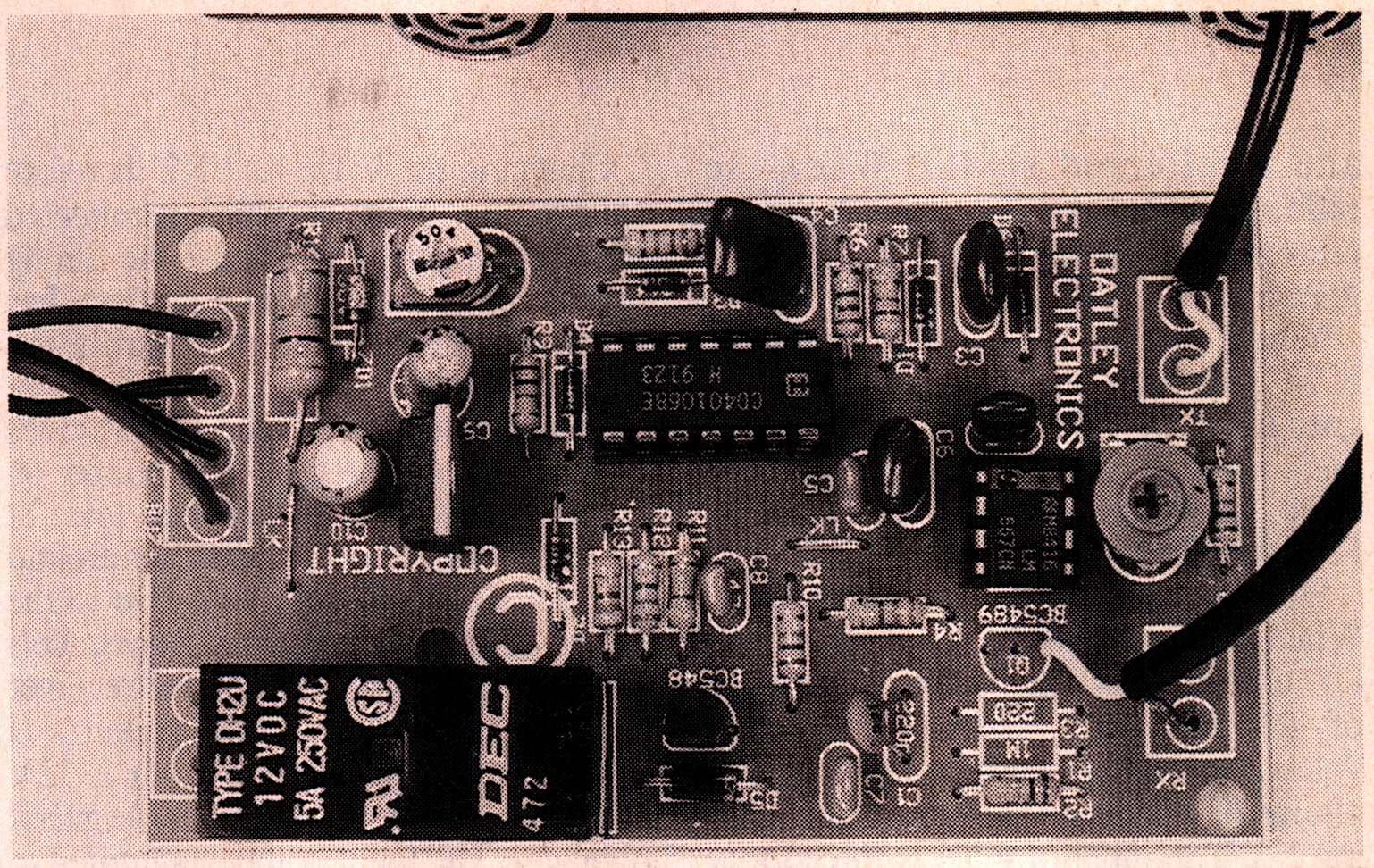

In this close up of the PCB, the amplifier components are mounted on the lead of the receiving tranducer. Notice how the shielded cable from the receiver is connected to the PCB.

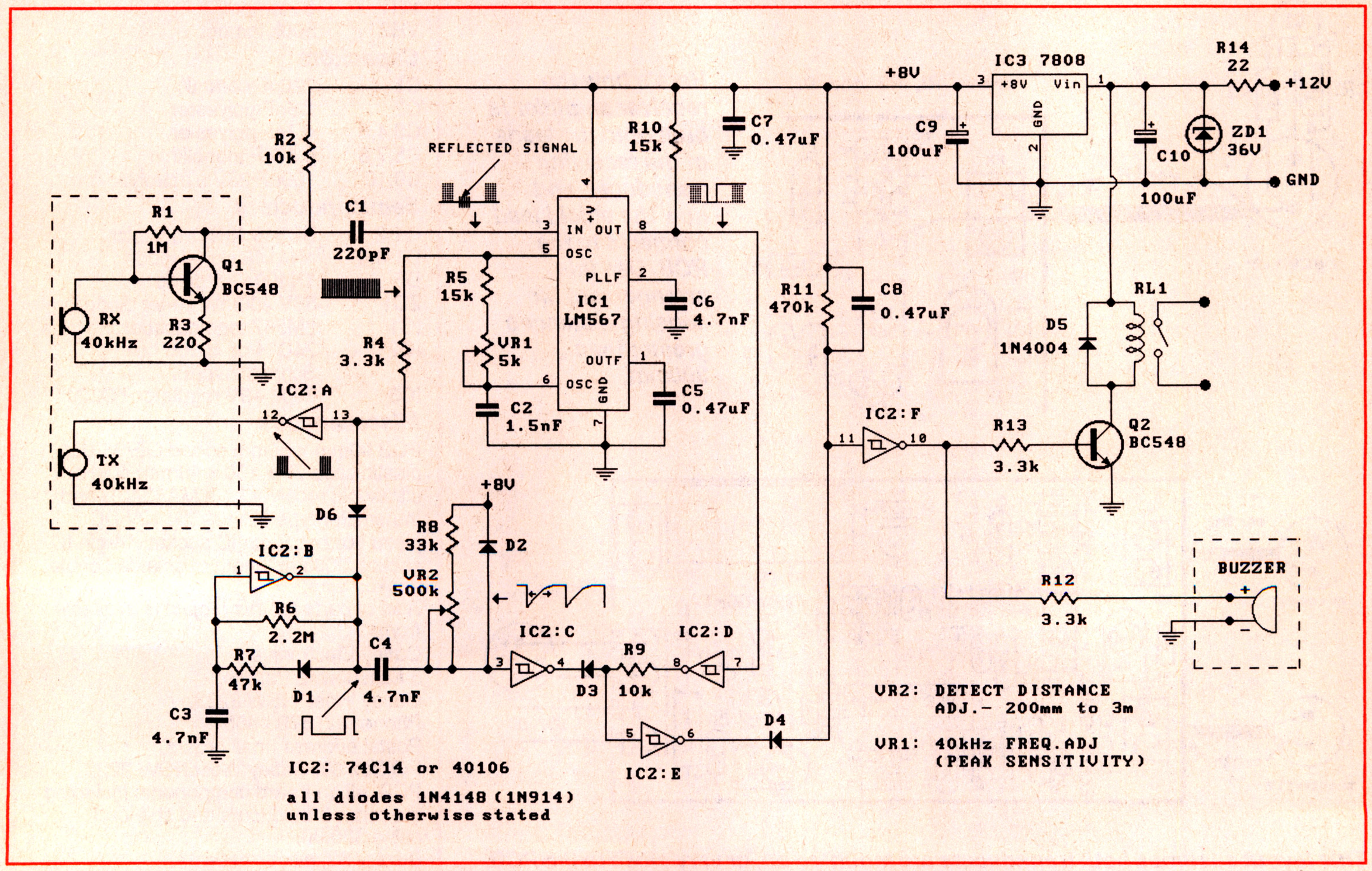

The LM567 produces a 40kHz output at pin 5, and the received signal is applied to pin 3. A low frequency oscillator around IC2b gates the transmitted pulses, and the network around IC2c determines the sensing distance.

and a reflected signal. When the reflected signal is in phase with the oscillator signal at pin 5, the output (pin 8) goes low.

When this happens, the output of IC2d goes high, and the output of IC2e goes low. This drives the output of IC2f high, switching on transistor Q2 and the relay. As well, the high at the output of IC2f sounds the piezo buzzer.

However, there's a bit more to it. When the oscillator of IC2b goes low, C4 charges via the resistive network of R8 and VR2. When the charge voltage of C4 reaches a logic 1, the output of IC2c goes low, forward biasing D3. The input of IC2e is forced to a low, overcoming the high supplied by R9 from IC2d. This turns off the relay and the buzzer.

The setting of VR2 determines how long it takes for C4 to charge, and if the reflected signal occurs outside this time limit, there will be no response from the circuit. It's only when the reflected signal occurs before C4 has charged to a logic 1 that an output can occur.

Changing the value of VR2 therefore changes the point at which a reflected signal is recognised. Because the timing of this signal depends on how far it has travelled, VR2 therefore controls the detection distance.

The network of R11 and C8 provides a delay to keep the relay and buzzer on during the 30ms time between lows at the output of IC1. The amplifier around Q1 provides a gain of about five to the output of the receiving transducer. This amplifier should be close to the receiver transducer to minimise noise pickup.

The circuit is powered from a 12V DC supply, via an 8V three-terminal regulator. The input voltage is limited to 36V by R14 and ZD1. The buzzer is a piezo device that produces an output when a DC input is supplied. Therefore, the buzzer must be connected with the right polarity. It is driven via R12 from the output of IC2f.

Construction

As the photos show, the plastic box holds the transmitting and receiving transducers, with the PCB fitted inside. External connections are to the buzzer and a 12V DC power source. The PCB holds everything else, including the relay.

It's possible to mount the ultrasonic transducers directly on the PCB, but this should only be done if you are using the unit to detect objects at short distances (300mm or so). In this case follow the layout diagram that shows all components on the PCB.

To detect distances greater than 300mm, mount the transducers on the side of the plastic box as shown in the lead photo. This allows the two transducers to be mounted apart from each other, reducing the amount of 'common mode' signal at the receiver. That is, the receiver picks up less of the

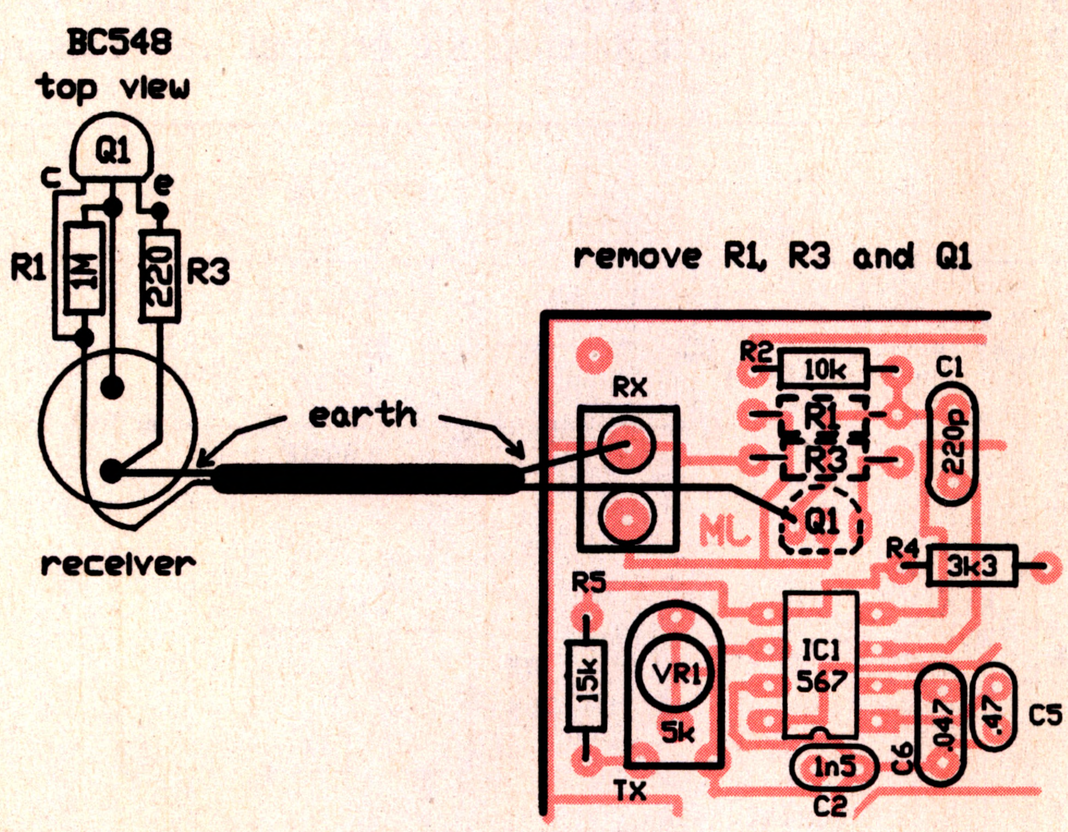

Here's how the receiver amplifier is built onto the leads of the receiving transducer, and how the shield lead connects to the PCB. Use this arrangement for sensing distances greater than 300mm.

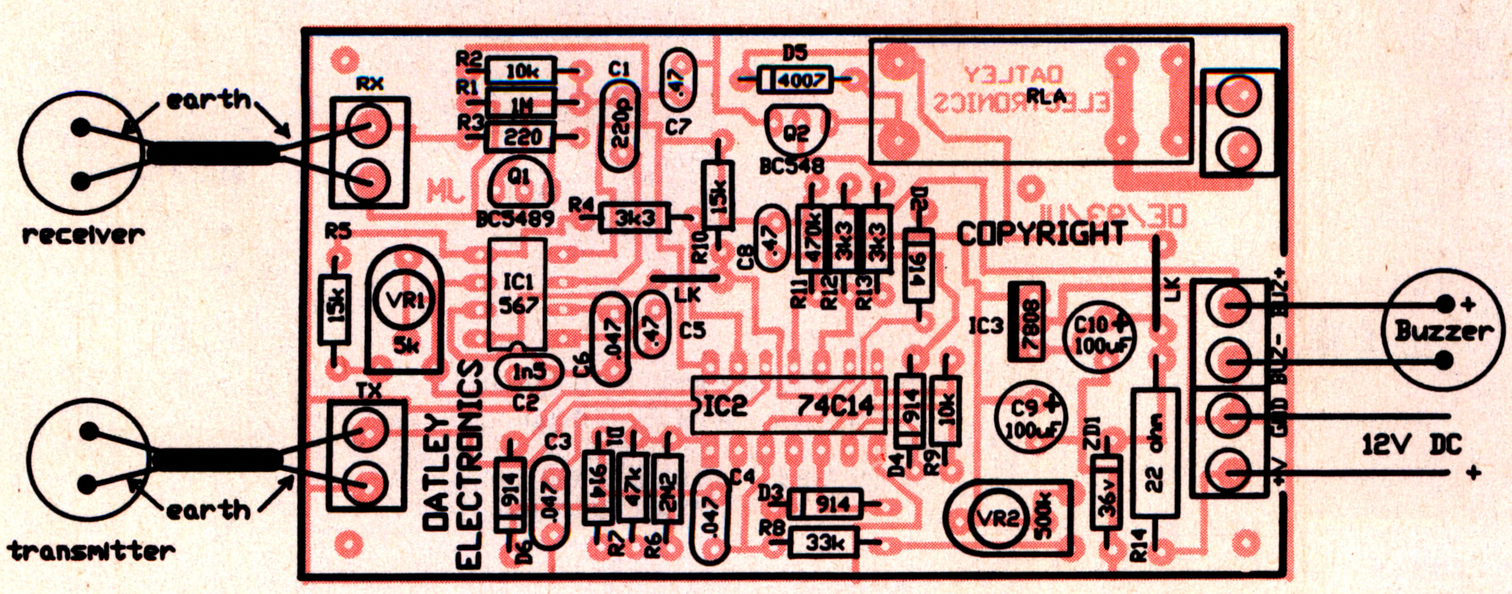

This layout assumes both transducers are mounted on, or very close to the PCB. Make sure the earth braid of the shielded cable for both tranducers goes to the pin connected to the case of the transducer.

PARTS LIST

Resistors

All 1/4W, 5% unless otherwise stated:

R1	1M
R2,9	10k
R3	220 ohm
R4,12,13	3.3k
R5,10	15k
R6	2.2M
R7	47k
R8	33k
R11	470k
R14	22 ohm, 1W
VR1	5k trimpot
VR2	500k trimpot

Capacitors

C1	220pF ceramic
C2	1.5nF polyester
C3,4,6	4.7nF polyester
C5,7,8	0.47uF monolithic
C9,10	100uF 25V electrolytic

Semiconductors

Q1,2	BC548 NPN transistor
D1-4,6	1N4148 signal diode
D5	1N4004 1A diode
ZD1	36V 400mW zener diode
IC1	LM567 tone decoder
IC2	74C14 or 40106 hex Schmitt inverter
IC3	7808 +8V regulator TO220

Miscellaneous

PCB 90mm x 50mm coded OE/93/UL; plastic case 70 x 130 x 40mm; 40kHz ultrasonic receiver type MA40A3R and transmitter type MA40A3S; 12V DC piezo buzzer; 8-pin IC socket; 14-pin IC socket; 200mm length of shielded cable; hookup wire.

A kit of parts for this project is available from:

Oatley Electronics
5 Lansdowne Parade,
Oatley West, NSW 2223.
Phone (02) 579 4985
Postal address (mail orders):
PO Box 89, Oatley West NSW 2223.
PCB, all on-board components including the relay, transducers and shielded cable $20.00.
Buzzer $3, plastic case $4.
The PCB artwork for the project is copyright to Oatley Electronics.

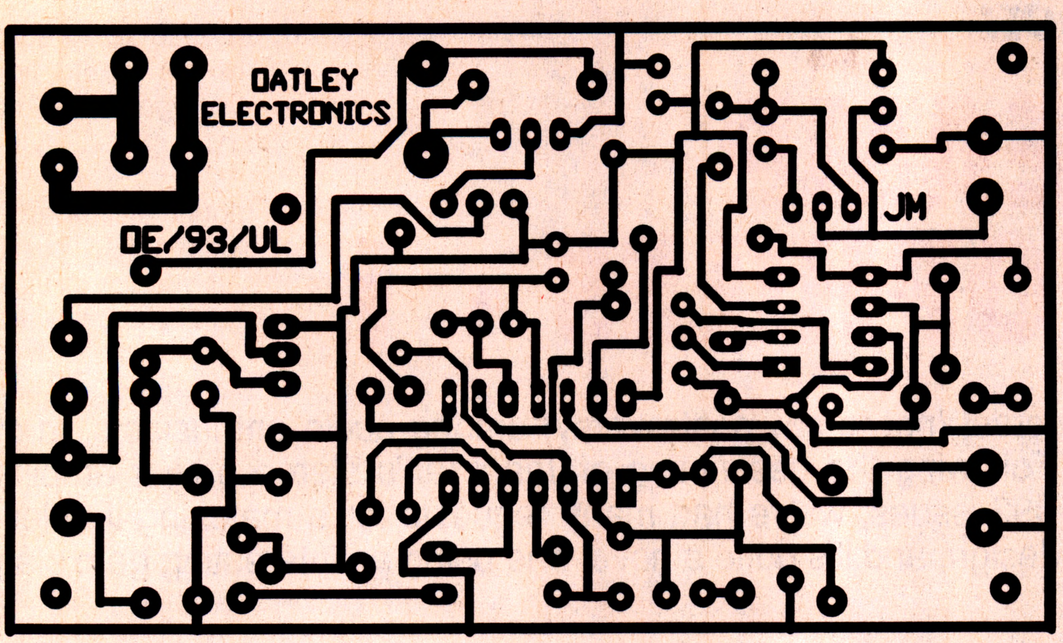

The PCB pattern is reproduced here full size for those who want to make their own. The design is copyright to Oatley Electronics.

signal being produced by the transmitter, and therefore gives the circuit a better chance to detect a reflected signal.

For this, you'll need to mount the amplifier components Q1, R1 and R3 on the receiving transducer. The photo in Fig.2 shows a close-up of how the transistor and two resistors are mounted. The layout diagram for this arrangement shows where the connections go between the PCB and the receiver.

Build the PCB assembly first, taking the usual care with the diode, electrolytic capacitor, transistor and IC orientation. The ICs can be mounted in sockets, or soldered directly to the PCB. Note that the metal tab of the voltage regulator is towards the centre of the board.

The transducers are held to the plastic box with silicon glue and two holes for each device need to be drilled in the side of the box for the transducer leads. The transducers should be mounted so they are about 70mm apart.

Both transducers connect to the PCB with shielded cable. The cable length in the prototype for both devices is 120mm. It's important to connect the earth braid of the shielded cable to the earth pin of the transducers. This pin connects to the transducer's case, which is obvious by inspection. Mount the amplifier components on the receiving transducer after the device is fitted to the box. Keep the component leads as short as possible. The buzzer can be mounted inside the box, or externally. The power supply is external.

Getting it going

If you are using this project to sense objects more than a metre away, some form of acoustic isolation between the transducers will be needed. A piece of polystyrene or sponge slightly higher than, and wedged between the transducers will do. You might need to experiment with its height and shape for sensing distances above two or three metres. A piece of sponge rubber cut as a semicircle was used on the prototype, and it was possible to get reliable sensing of objects up to five metres away.

There are two adjustments to make: the sensitivity and the detect distance. The sensitivity is adjusted with VR1, located near the input leads from the transducers. This trimpot sets the operating frequency of the internal oscillator of IC1, and is a critical adjustment.

With a suitable 12V power source connected, set VR2 halfway and adjust VR1 so the buzzer sounds when an object is held in front of the transducers. You should be able to adjust VR2 (distance) to give a response to an object over three metres away. However, this setting is quite tricky, and you'll need to set the sensitivity pot VR1 very carefully. Shorter detect distances are not quite so critical.

The relay is rated at 240V 5A, but we don't recommend connecting 240V mains directly to the PCB as the track layout is not 240V rated. If you want to operate a 240V appliance, do it by using the on-board relay to switch another remotely placed relay.

And that's all there is to building this device. The PCB can be held in place inside the box with reusable removable adhesive (BlueTack or its equivalent). What use you put this project to is now up to your imagination. ❖