APPLICATION CIRCUITS

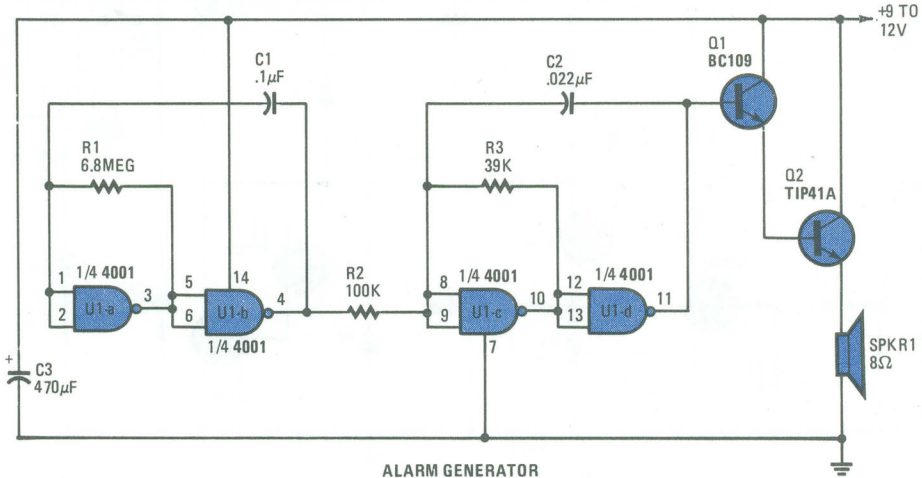

ALARM GENERATOR